Chapter 2

# SAMPLED DATA SYSTEMS

Controls, with minor exceptions, are today performed using the computer, and the computer handles sampled data signals. This requires to understand the behavior inside a closed loop control of sampling.
Selection of the sampling period, treatment of disturbances and plant high frequency dynamics are engineering problems by themselves. However, once the selection has been performed, the measurements have been conditioned and a discrete time model has been derived design techniques are fundamentally identical in the continuous and in the discrete case. In one case we are dealing with differential equations, in the other with difference equations, and two parallel treatments can be conducted. We must not ignore, however, that the control loop remains an hybrid system where the process is continuous and only the controller is realized with digital filters. For this reason, we have maintained a connection between the two views translating the continuous model into a sampled data one, understanding the differences introduced by a digital filter with respect to the more classical analogue one, but continuing to think in term of continuos systems.

## 2.1 Dynamic sampled data systems

In a digital control system the computer generates internally at discrete intervals of time the sequence of samples of the reference signals, receives in input the samples of the measurements performed on the process, and offers in output the samples of control. We assume here that the sampling period is constant and unique, and measurements and control are performed synchronously, each sample, at the same instant. Samples of measurements are obtained through analogue to digital converters, data are processed, in negligible time, in order to generate a sample of control transferred to a digital to analogue converter that reconstructs from the samples a continuous like signal to control the process.
In these conditions the input signal $\overline{u}(t)$ is obtained through a process of *reconstruction* (conversion digital to analogue) from the sequence of samples $u(k)$ at the instants of time $t = \Delta \cdot k$. On the other side the signals in output from the process $y(t)$ are transferred to the digital controller through an analogue to digital converter in the form of samples $y(k)$. Figure 2.1 represents a digitally controlled system with measurement

samples $y(k)$, the control samples $u(k)$ processed by the computer and the reconstructed signal $\bar{u}(t)$ at the exit of the D/A converter.

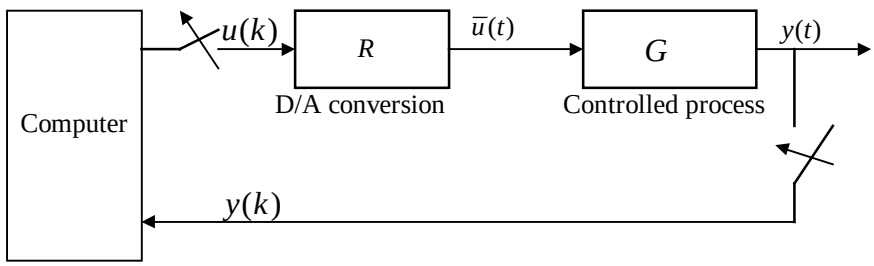


**Fig. 2.1** Digital control and signal sampling

We find now for this system the relationship between the different sequences of samples $u(k)$, $x(k)$, $y(k)$ input, state and output of the process.

Sampling a signal is immediate: samples $y(k)$ are the values of $y(t)$ taken at instant of time multiple of the sampling period $\Delta$.

Reconstructing a signal is a more complex process. A continuous function must be selected, called *reconstruction* or *interpolation function*, generate with this function a basis obtained by delaying the basic function of multiple of the sampling period and finally reconstruct the signal as a linear combination of the basis weighted by the signal samples:

$$\bar{u}(t) = \sum_{k=0}^{\infty} \psi(t - \Delta \cdot k) \cdot u(k) . \tag{2.10}$$

For real-time control we need that the interpolation function be casual and to maintain the integral in time before and after the reconstruction approximately identical we impose that:

$$\int_{0}^{+\infty} \psi(\tau) \cdot d\tau = \Delta ,$$

For simplicity we consider functions different from zero only in the interval $[0, \Delta)$. The reconstruction (2.10) assumes the form:

$$\bar{u}(t) = \psi(t - \Delta \cdot k) \cdot u(k) \quad \Delta \cdot k \le t < \Delta \cdot (k+1) . \tag{2.11}$$

We will consider two cases of interest: the reconstruction function is the unitary impulse of Dirac, and the unitary rectangle:

$$\psi(t) = \begin{cases} \Delta\delta(t) & \text{pulse reconstructor} \\ u_0(t) - u_0(t-\Delta) & \text{rectangle reconstructor.} \end{cases}$$

where $u_0(t)$ is the unitary step.

In the first case the reconstruction generates a sequence of pulse modulated by the samples spaced by $\Delta$, we call a train of pulses:

$$\overline{u}(t) = \sum_{k=0}^{\infty} u(k) \cdot \Delta \cdot \delta(t - \Delta \cdot k) \; ;$$

in the second case a step wise constant signal.

Let analyze the response of a dynamic system driven by a previously reconstructed signals.

The system is given in the classical state variable representation

$$\begin{aligned} \dot{x}(t) &= A \cdot x(t) + B \cdot u(t) \\ y(t) &= C \cdot x(t) + D \cdot u(t). \end{aligned} \tag{2.12}$$

The state transition from instant $t$ to instant $t + \Delta$ is

$$x(t+\Delta) = e^{A\Delta} \cdot x(t) + \int_0^{\Delta} e^{A \cdot (\Delta - \tau)} \cdot B \cdot \overline{u}(t+\tau) \cdot d\tau$$

hence, considering the only instants of time multiples of $\Delta$ we have:

$$x(k+1) = e^{A\Delta} \cdot x(k) + \left[ \int_0^{\Delta} e^{A(\Delta-\tau)} \cdot \psi(\tau) \cdot d\tau \right] \cdot B \cdot u(k) \; . \tag{2.13}$$

Equation (2.13) shows that a system described by a state representation (2.12) receiving in input a signal obtained from a reconstructor behaves at the sampling times identically to an equivalent discrete time system with the following equations:

$$\begin{aligned} x(k+1) &= \overline{A} \cdot x(k) + \overline{B} \cdot u(k) \\ y(k) &= \overline{C} \cdot x(k) + \overline{D} \cdot u(k). \end{aligned} \tag{2.14}$$

By comparison between (2.12), (2.13) and (2.14) is immediate to verify the following equalities:

$$\overline{C} = C \qquad\qquad \overline{D} = D \tag{2.15}$$

$$\overline{A} = e^{A\Delta} \tag{2.16}$$

The matrix $\overline{B}$ for the two types of reconstruction function considered is respectively:

$$\overline{B} = \Delta \cdot e^{A\Delta} \cdot B \quad \text{pulse reconstructor} \tag{2.17}$$

$$\overline{B} = \left[ \int_0^{\Delta} e^{A\cdot(\Delta-\tau)} \cdot d\tau \right] \cdot B \quad \text{step reconstructor} \cdot \tag{2.18}$$

Let note, finally, that if the matrix $A$ is invertible, for a step reconstructor:

$$\overline{B} = A^{-1} \cdot [e^{A\cdot\Delta} - I] \cdot B \,. \tag{2.19}$$

If we remember that the exponential function can be expressed by the Taylor series:

$$e^{A\cdot\Delta} = I + A\cdot\Delta + \cdots \frac{1}{n!}(A\cdot\Delta)^n \tag{2.20}$$

the two previous expressions of $\overline{B}$ become:

$$\begin{aligned} \overline{B} &= \Delta \cdot \left( I + A\cdot\Delta + \cdots \frac{1}{n!}(A\cdot\Delta)^n \right) \cdot B \qquad \text{pulse reconstructor} \\ \overline{B} &= \Delta \cdot \left( I + \frac{1}{2} A\cdot\Delta + \cdots \frac{1}{n!}(A\cdot\Delta)^{n-1} \right) \cdot B \quad \text{step reconstructor} \end{aligned} \tag{2.21}$$

For small values of $\Delta$ stopping the series at the terms of first order both result in:

$$\overline{A} \cong I + A\cdot\Delta, \quad \overline{B} \cong \Delta \cdot B \,. \tag{2.22}$$

This is exactly what we found in the introduction by approximating the derivative to first order differences.
As a matter of fact, the interpolators commonly found in commercial D/A converters are of the step type, hence, (2.14) is the exact system response, at least at the sampling times. The resulting discrete time system in difference equations can be used directly for the design with algorithms strictly similar to the continuous case. For the analysis, however, the situation is more complex, as we loose in the discrete time system the connection with frequency. The next sections will be devoted to regain a connection between the two visions of the model.

## 2.2 Frequency analysis

The previous section showed how the dynamic system is viewed from the digital controller. In this section the dual view directly of the continuous system subject to sampled control is developed. The results are taken from [1].
In the sampled data control loop are present two types of signals: continuous time and sampled data, that have in the D/A converter their contact point. We will adopt as reconstructor the rectangle, it also called zero order hold (ZOH). The mathematical technique to relate the two types of signals is to imagine the converter divided in two steps:

- a *pulse sampler* where the samples $u(k)$ are initially converted to a train of modulated pulses $\hat{u}(t)$ with Laplace transform indicated with $\hat{U}(s)$ ;

- an holding filter that receives the train of pulses in input and gives in output the reconstructed signal. The input is $\hat{u}(t)$ the output is the signal $\overline{u}(t)$ with Laplace transform $\overline{U}(s)$.

The two phases of reconstruction are presented in figure 2.2 where you find an ideally continuous signal $u(t)$, the sequence of its samples $u(k\Delta)$, the output $\hat{u}(t)$ of the modulator, the output $\overline{u}(t)$ of the reconstruction filter.

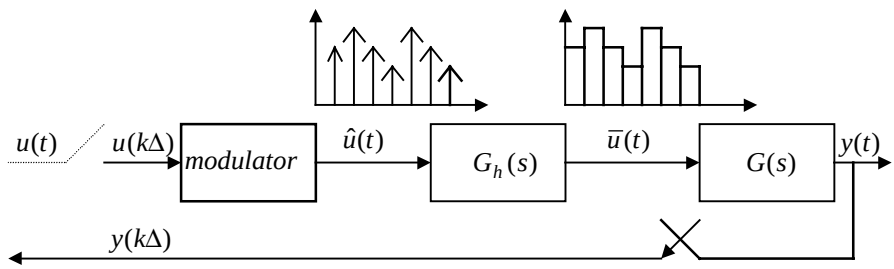


**Fig. 2.2** Detailed schema of a D/A converter

### 2.2.1 *Sampling a signal*

The reconstructed signal using a step interpolator, given from (2.10), can be written as follows

$$\overline{u}(t) = \sum_{k=0}^{\infty} u(k) \cdot (u_0(t - \Delta \cdot k) - u_0(t - \Delta \cdot (k+1)))$$

The Laplace transform of this signal is

$$\overline{\mathrm{U}}(\mathrm{s}) = \sum_{k=0}^{\infty} u(k) \cdot (\frac{1}{s} e^{-s \cdot \Delta \cdot k} - \frac{1}{s} e^{-s \cdot \Delta \cdot (k+1)}) =$$

$$\frac{1}{s} \cdot (1 - e^{-s \cdot \Delta}) \cdot \sum_{k=0}^{\infty} x(k) \cdot e^{-s \cdot \Delta \cdot k}$$

$$\hat{U}(s) = \sum_{k=0}^{\infty} x(k) \cdot e^{-s \cdot \Delta \cdot k}$$

$$\overline{\mathrm{U}}(s) = G_h(s) \cdot \hat{U}(s)$$

This transform evidences the analytical relationship between $\hat{u}(t)$ and $\overline{u}(t)$ of figure 2.2 showing the transfer function $\frac{1}{s} \cdot (1 - e^{-s \cdot \Delta})$ of the step reconstruction filter.

### *2.2.2 Pulse modulator*

The train of modulated pulses $\hat{u}(t)$ is the mathematical artifice needed to relate the two spaces of sampled data and continuous signals.
This signal can be represent in three different forms, each one emphasizing a different property.

*Representation using the Fourier series*

This form shows that the pulse modulated signal has a transform that is periodic in the frequency axis. It is obtained by the doubly infinite series built from the transform of the continuous signal translated on the $j\omega$ axis.

Let be $\Delta$ the sampling period and $\omega_\Delta = \frac{2\pi}{\Delta}$ the *sampling pulsation*.

The bilateral train of unitary pulses can be represented as

$$\delta_\Delta(t) = \sum_{i=-\infty}^{i=+\infty} \delta(t - \Delta \cdot i)$$

and rewritten in term of the Fourier series

$$\delta_\Delta(t) = \sum_{i=-\infty}^{i=+\infty} c_i \cdot e^{j \cdot w_\Delta \cdot i \cdot t} \;;$$

$$c_i = \frac{1}{\Delta} \cdot \int_{-\frac{\Delta}{2}}^{\frac{\Delta}{2}} \delta_\Delta(t) \cdot e^{-j \cdot w_\Delta \cdot i \cdot t} \cdot dt = \frac{1}{\Delta},$$

$$\delta_\Delta(t) = \frac{1}{\Delta} \cdot \sum_{i=-\infty}^{i=+\infty} e^{j \cdot w_\Delta \cdot i \cdot t} \;.$$

The pulse modulated signal can be written as the product between $u(t)$ and $\delta_\Delta(t)$

$$\hat{u}(t) = u(t) \cdot \delta_\Delta(t)$$

$$\hat{u}(t) = \frac{1}{\Delta} \cdot \sum_{i=-\infty}^{i=+\infty} u(t) \cdot e^{jw_\Delta it}$$

$$\hat{U}(s) = \frac{1}{\Delta} \cdot \sum_{i=-\infty}^{i=+\infty} U(s - jw_\Delta i)$$

The transform of the pulse modulated signal can be represented in term of the transform of the original continuous signal shifted on the $j\omega$ axis by multiples of $\omega_\Delta$. We note a few properties:

- The resulting transform is periodic on the imaginary axis, in particular the modulus is an even function and it phase is an odd function in $\omega$.

- If the original signal has rational transform any pole $\lambda_i$ of $U(s)$ is related to a doubly infinite series of poles $\lambda_i \pm j\omega_\Delta \cdot i, \quad i = 1,2,\cdots$.

Let see in an example how the behavior in frequency of the transform of a signal changes with sampling.

**Example 2.1** Behavior in frequency of the transform of a modulated signal

Let the signal transform be

$$G(s) = \frac{1}{\left(s^2 + 0.2s + 1.4\right)\left(s+2\right)} \tag{2.23}$$

sampled with a train of modulated pulses of period $\Delta = 1.5$. In figure 2.3 are shown real and imaginary parts of the transforms for $s = j\omega$: with a continuous line the continuous signal divided by $\Delta$ in the interval $0 - \infty$ and with dashed line the pulsed signal in the interval $0 - \omega_\Delta$.

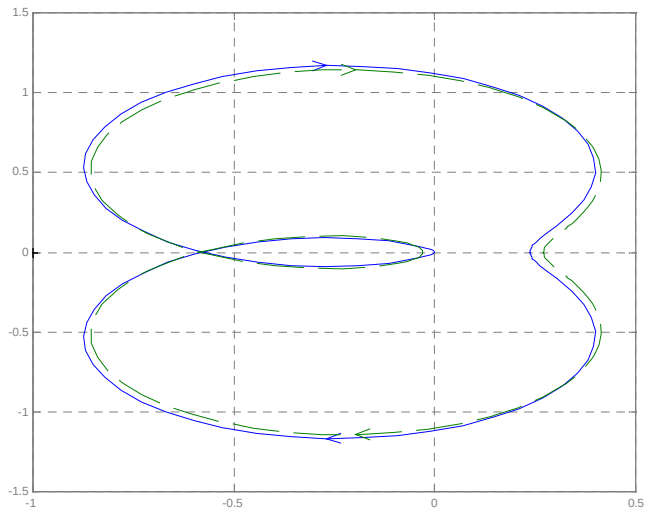


Fig. 2.3 Polar plot in frequency of a pulse modulated signal

*Z transform*

This form shows how the transform of a pulsed data signal can be explicitly represented from the samples in time of the signal.

The signal is given now as a sequence of pulses translated in time

$$\hat{u}(t) = \sum_{k=0}^{\infty} u(k) \cdot \delta(t - \Delta \cdot \mathrm{k})$$

$$\hat{u}(s) = \sum_{k=0}^{\infty} u(k) \cdot e^{-s \cdot \Delta \cdot k}$$

Defining with $z^{-1}$ the transform of the operator that delays a signal of one sample in time

$$z^{-1} \equiv e^{-s \cdot \Delta}$$

it results the definition of Z transform of the sequence of samples, counterpart for the discrete time of the Laplace transform

$$U(z) = \sum_{k=0}^{\infty} u(k) \cdot z^{-k}$$

Hence, the transform of the pulse modulated signal can be represented in term of the Z transform

$$\hat{U}(s) = U(z)\big|_{z = e^{s \cdot \Delta}}$$

by exploiting the change of variables $z = e^{s \cdot \Delta}$.
This relationship allows to regain the frequency interpretation of a sampled data signal.

*Representation using the convolution integral*

This third form is useful to show that sampling a signal having rational Laplace, the Z transform of the sampled signal is still rational.
As the modulated signal is the product of two signals, its transform is the convolutions of the transforms of the two signals

$$\hat{u}(t) = u(t) \cdot \sum_{i=0}^{\infty} \delta(t - \Delta \cdot \mathrm{i})$$

$$\hat{U}(s) = U(s) * \sum_{i=0}^{\infty} e^{-\Delta \cdot s \cdot i} = U(s) * \frac{1}{1 - e^{-\Delta \cdot s}} =$$

$$\frac{1}{2 \cdot \pi \cdot j} \cdot \int_{c - j \cdot \infty}^{c + j \cdot \infty} \frac{U(p)}{1 - e^{-\Delta \cdot (s - p)}} \cdot dp$$

The convolution product is computed by the circular integral covering the region of the plane s which contains zeros and poles of $U(s)$, and choosing $c$ in order to isolate the doubly infinite series of poles of $\frac{1}{1 - e^{-\Delta(s-p)}}$.

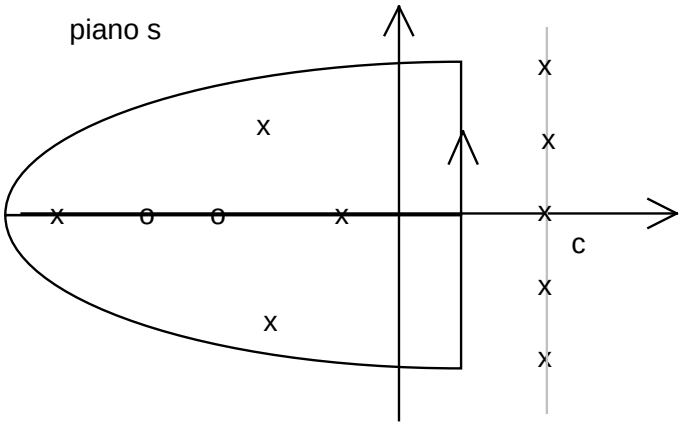


**Fig. 2.4** Contour integral on the plane *s*

Let assume, for simplicity, that all poles of X are isolate, we have

$$\hat{U}(s) = \frac{1}{2 \cdot \pi \cdot j} \cdot \circ \ldots = \sum_{i=1}^{n} \left. \frac{[\text{residual of } U(p)]}{1 - \mathrm{e}^{\Delta \cdot p} \cdot \mathrm{e}^{-\Delta \cdot s}} \right|_{p=\lambda_i} =$$

$$U(z)\big|_{z=e^{\Delta \cdot s}} = \sum_{i=1}^{n} \left. \frac{[\text{residual of } U(p)] \cdot z}{z - \mathrm{e}^{\Delta \cdot p}} \right|_{p=\lambda_i}$$

This result exhibits the relationship between rational transform of a continuous signal and the Z transform of the pulse modulated signal. The poles of the Z transform are obtained from those of the Laplace transform through the mapping $z = e^{s \cdot \Delta}$.

*Relationship between s and z planes*

In this section we outline the relationship between the two planes *s* and *z* introduced by the mapping $z = e^{s \cdot \Delta}$.
The imaginary axis of *s* (the frequency axis) is transformed in the unitary circle in *z*, the left semi-plane containing singularities of the transform with negative real part is mapped to the interior of the unitary disk. The frequency value is read from the phase in radiant of the points of the circle

$$\vartheta = w \cdot \Delta$$

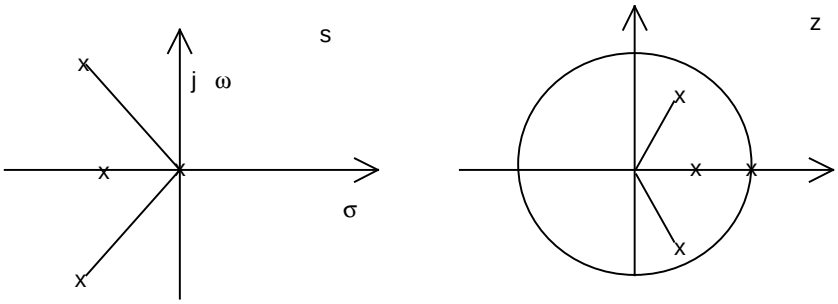


**Fig. 2.5** Relationship between the planes *s* and *z*

The same mapping relates the poles of the transfer functions in the two realms; for real poles:

$$\lambda \Leftrightarrow e^{\lambda \cdot \Delta}$$

$$(s-\lambda) \Leftrightarrow (z-e^{\lambda \cdot \Delta})$$

and for pairs of complex conjugate poles and second order polynomials:

$$\sigma \pm j \cdot \omega \Leftrightarrow e^{\sigma \cdot \Delta} \cdot e^{\pm j \cdot \omega \cdot \Delta}$$

$$(s^2 + 2 \cdot \zeta \cdot \omega_n \cdot s + \omega_n^2) \Leftrightarrow (z^2 - 2 \cdot e^{\sigma \cdot \Delta} \cdot \cos(\omega \cdot \Delta) \cdot z + e^{2 \cdot \sigma \cdot \Delta})$$

## 2.3 The control loop in the presence of sampling

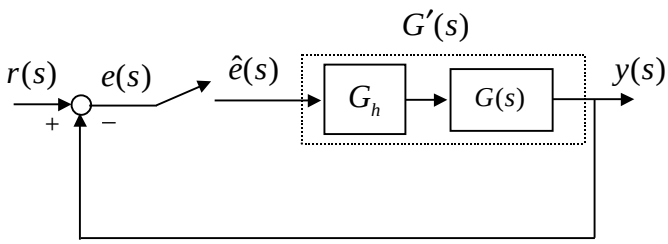


**Fig. 2.6** Feedback loop in the presence of sampling

Using the transform of sampled data signals we can now analyze the behavior of a control loop. Let start from a simple case were the error signal in closing the loop is sampled and a reconstructed before applying it to the system. The reconstruction filter is

isolated from the sampler and integrated with the continuos plant, so we can write the output of the system as:

$$\begin{aligned} G'(s) &= G(s)\cdot G_h(s) = G(s)\cdot\frac{1-e^{-s\cdot\Delta}}{s} \\ Y(s) &= G'(s)\cdot\hat{E}(s) \\ \hat{E}(s) &= \hat{R}(s)-\hat{Y}(s) \end{aligned} \tag{2.24}$$

In general the pulse transform doesn't commute with the product of functions, i.e.

$$\begin{aligned} Y(s) &= G_1(s)\cdot G_2(s)\cdot U(s) \\ \hat{Y}(s) &\neq \hat{G}_1(s)\cdot\hat{G}_2(s)\cdot\hat{U}(s) \end{aligned}$$

however, if we sample $Y(s)$ in (2.24), as one of the two functions is already pulse sampled, the following result holds

$$\begin{aligned} \hat{Y}(s) &= \hat{G}'(s)\cdot\hat{E}(s) \\ \hat{E}(s) &= \frac{1}{1+\hat{G}'(s)}\hat{R}(s) \end{aligned} \tag{2.25}$$

Equation (2.25) shows that the closed loop behavior in the presence of sampling, its stability in particular, depends on the loop function $\hat{G}'(s)$, the pulse transform of the continuous plant cascaded by the holding filter.
In a more realistic situation the control samples before reconstruction are obtaining by a digital filter implemented in the computer

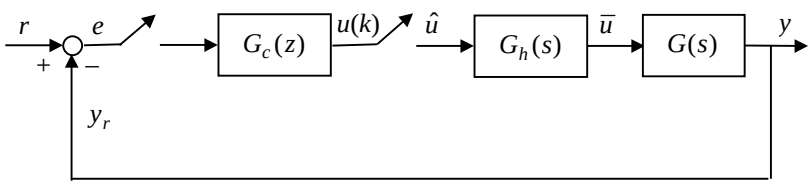


**Fig. 2.7** Control with digital filter

Remembering that the Z transform of a digital filter can be interpreted as the pulse transform of a corresponding continuous system, this is equivalent to image a second pulse sampler before the filter. The loop assume the configuration of figure 2.7 and the loop transfer function becomes

$$\begin{aligned} \hat{G}_a(s) &= \hat{G}_c(s)\cdot\hat{G}'(s) \\ \hat{G}_c(s) &= G_c(z)\big|_{z=e^{s\Delta}} \end{aligned} \tag{2.26}$$

### *2.3.1 Characteristics of* $\hat{G}'(s)$

To have a better understanding of $\hat{G}'(s)$, and to compute it exactly or approximately we offer here a few techniques.

We know that $\hat{G}'(s)$ is the result of a series built from the function $G'(s)$ translated along the axis $j\omega$

$$\hat{G}'(s) = \frac{1}{\Delta}\sum_{i=-\infty}^{\infty} G'(s - jw_\Delta \cdot i)$$

If we approximate the holding filter, included in the function, as:

$$G_h(s) = \frac{1-z^{-1}}{s} \approx \frac{2}{s+\frac{2}{\Delta}} \tag{2.27}$$

and ignore the contributions of all elements of the series with the exception of the central one, we have for the first half of the sampling frequency (we already know that the function is periodic)

$$\hat{G}'(s) \overset{w<\frac{w_\Delta}{2}}{\cong} \frac{\frac{2}{\Delta}}{s+\frac{2}{\Delta}}\cdot G(s) \quad .$$

The exact representation of $\hat{G}'(s)$ can be obtained through standard $Z$ transform, remembering that

$$\hat{G}'(s) = (1-z^{-1})\cdot Z(\frac{1}{s}G(s)) = G(z)\big|_{z=e^{\Delta\cdot s}} .$$

Alternatively, we want to mention that $G(z)$ can be obtained from the Z transform of the state representation (2.14) using a ZOH reconstructor, i.e.

$$G(z) = C\left(zI - \overline{A}\right)^{-1}\overline{B} .$$

For an approximate solution of the transfer function it is also possible to adopt an elegant result of Åström [2]

$$G(z) \approx \frac{\bar{k}^* \cdot \prod_{i=1}^{m}\left(z - e^{z_i \cdot \Delta}\right) \cdot \prod_{i=1}^{n-m-1}\left(z - \tilde{z}_i\right)}{\prod_{i=1}^{n} z - e^{\lambda_i \cdot \Delta}}$$

The Z transform of a transfer function proper and rational of order n, with ZOH filter has n poles obtained from the continuous system with the usual mapping and n-1 zeros that asymptotically for $\Delta \to 0$ assume the following values:

- m zeroes are the mapping of the corresponding continuos zeroes as for the poles;
- the n-m-1 remaining zeroes are fixed roots of the following polynomials:

| | |
|---|---|
| 1 | $z+1$ |
| 2 | $z^2+4\cdot z+1$ |
| 3 | $z^3+11\cdot z^2+11\cdot z+1$ |
| 4 | $z^4+26\cdot z^3+66\cdot z^2+26\cdot z+1$ |

with values, according to the order

| | |
|---|---|
| 1 | $-1$ |
| 2 | $-3.732-0.268$ |
| 3 | $-1-9.899-0.101$ |
| 4 | $-2.322-23.20-0.43-0.043$ |

**Example 2.2** The transfer function of a sampled data system with hold filter

Let the system be

$$G(s) = \frac{1}{\left(s^2+0.2s+1.4\right)\left(s+2\right)} \tag{2.28}$$

select a sampling period of $\Delta = 0.5$. Compare the continuous and sampled data cases, with exact solutions or different approximations according to (2.27) or exploiting the formulas of Åström.
In this case all approximations of the transfer function are good. The frequency behavior of the sampled data system is different from the continuous one, and this must be accounted for in designing the control.

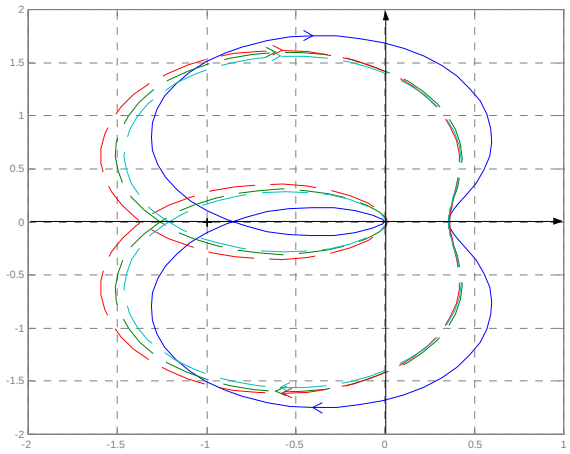


**Fig. 2.8** Sampled data system with its approximations

### *2.3.2 Approximation of the delay operator*

We recall a classical approximation formula for the delay operator:

$$R(s) = e^{-T \cdot s}$$

$$s^{-1} = \frac{T}{\ln R}$$

the ***ln(R)*** can be expanded in the series

$$\ln R = 2 \cdot (v + \frac{v^3}{3} + \frac{v^5}{5} + \cdots); \text{ with}$$

$$v = \frac{1 - R^{-1}}{1 + R^{-1}}$$

so $s$ can be rewritten as:

$$s^{-1} = \frac{\frac{T}{2}}{v + \frac{v^3}{3} + \frac{v^5}{5} + \cdots} \approx \frac{T}{2v} = \frac{T}{2} \cdot \frac{1+R}{1-R}$$

and $R$:

$$R(s) \approx -\frac{s-\frac{2}{T}}{s+\frac{2}{T}}$$

In particular, when the delay is of one sampling period:

$$R(s) = z^{-1}, \quad T = \Delta$$

### *2.3.3 Implementing digital filters*

The most effective way of implementing a digital filter is through its state variable representation. For SISO system the transfer function can be used, as well, remembering the relationship between $z^{-1}$ and the unitary delay.
Let be a proper filter given by

$$\overline{G}(z) = \frac{\overline{b}_{\overline{m}} z^{m} + \overline{b}_{\overline{m}-1} z^{m-1} + \cdots + \overline{b}_0}{z^{n} + \overline{a}_{n-1} z^{n-1} + \cdots + \overline{a}_0} = \frac{y(z)}{u(z)}$$

if we divide numerator and denominator by z at the highest power we obtain

$$\overline{G}(z) = \frac{\overline{b}_{\overline{m}} z^{-n+m} + \overline{b}_{\overline{m}-1} z^{-n+m-1} + \cdots + \overline{b}_0 z^{-n}}{1 + \overline{a}_{n-1} z^{-1} + \cdots + \overline{a}_0 z^{-n}} = \frac{Y(z)}{U(z)}$$

and transforming the signals to the sample space

$$(1+\overline{a}_{n-1}q^{-1} + \cdots + \overline{a}_0 q^{-n})y(k) = (\overline{b}_{\overline{m}} q^{-n+m} + \overline{b}_{\overline{m}-1} q^{-n+m-1} + \cdots + \overline{b}_0 q^{-n})u(k)$$
$$y(k) = -\overline{a}_{n-1} y(k-1) - \cdots - \overline{a}_0 y(k-n) + \overline{b}_{\overline{m}} u(k-n+\overline{m}) + \overline{b}_{\overline{m}-1} u(k-n+\overline{m}-1) + \cdots + \overline{b}_0 u(k-n)$$

Implementing recursively previous algorithm generate the *digital filter*.
For numerical reasons, due to the number of significant digits of the parameters, the digital filter is usually realized decomposing its transfer function in first and second order blocks in cascade or in parallel.

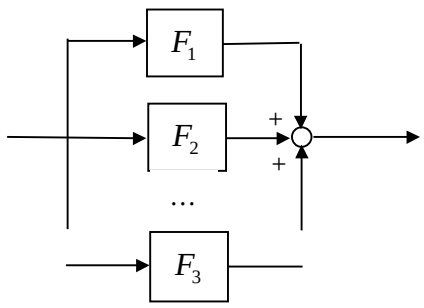


**Fig. 2.9** Structure in cells of a digital filter

Each elemental cell is of the type:

$$y(k) = \sum_{j=1}^{2} -a_{2-j} \cdot y(k-j) + \sum_{j=0}^{2} b_{2-j} \cdot u(k-j)$$

using one of the canonical forms discussed in the next chapter 4, e.g. the control form:

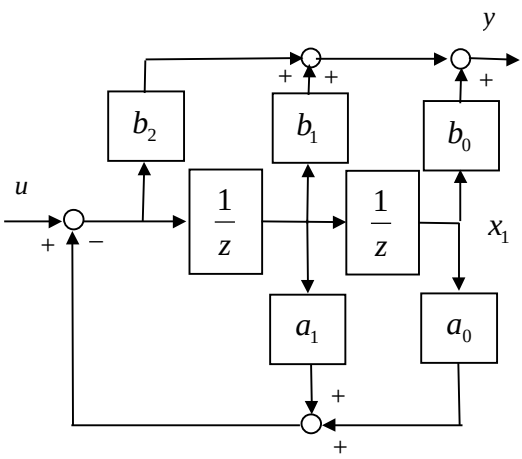


**Fig. 2.10** Elemental cell of a second order digital filter

## 2.4 Bibliography

[1] G. F. Franklin, M. L. Workman, D. Powell “Digital Control of Dynamic Systems ”, Addison-Wesley, third edition, 1997
[2] Åström “Zeros of sampled data systems” 19 IEEE Decision and Control Conference Albuquerque 1980