Chapter 5

PERFORMANCE AND ROBUSTENESS IN CONTROL

Previous chapters considered the analysis of the closed loop controlled system and its stability in nominal conditions. Obviously, without stability we don't have a control system, but stability, alone, is not sufficient. To be useful from an engineering point of view the controlled system must satisfy an envelop of requirements. These requirements refer to the behavior of a certain number of significant system variables in steady state and during transients in response to external signals, either references or disturbances. These requirements are called performances of the control. Or they refer to the capability to guarantee performances, and especially stability, in the presence of plant uncertainties: this is called robustness. In the previous chapter we have shown, mostly for the SISO case, how properties of the control are evaluated by the four classical closed loop transfer functions: loop sensitivity, complementary sensitivity, input disturbance sensitivity and control activity.

In this chapter we present a unitary model covering both performances and robustness that extends and generalizes previous concepts to MIMO systems. The approach is based on the construction of an appropriate extended system embedding nominal model, process uncertainty, disturbances, and requirements. It has the scope to link performances and robustness to the selected control law and drives the design. Achievement of the objectives are measured by the norm of the extended system in closed loop.

5.1 The extended system of the control problem

The key point of any model based design is the relationship between the process and the model chosen to represent it. Differences between them, commonly indicated as uncertainties, are due to the presence of external (unknown) disturbances (classically they were called additive disturbances), and model approximations (multiplicative disturbances). The first group of elements affects primarily the performance of the controlled system, the second group the stability of the closed loop.

We have discussed in the introduction two possible points of view to relate process and model, we will develop here the view we called *transparent box*, where we assume to know explicitly the causes that originate the differences on the outputs (external disturbances or modeling errors). The second one, we called *black box*, where the system behavior is filtered by a model-reconstructor and discrepancies are abstractly represented by the error between the outputs measured on the system and those returned by the model will be delayed until the chapter devoted to synthesis.

To formalize the relationship between process and model it is convenient to introduce a particular dynamic structure composed of two groups of inputs and outputs: the first group of inputs are disturbances or in general external signals (disturbances entering on the dynamics, disturbances on the measurements, reference signals, effects of modeling approximations), the second group are the controls. The first group of outputs represents the objectives, those plant signals that must satisfy control requirements (output sensitivity from disturbances, control activity, state activity, output reference tracking errors), the second group are the measurements used to close the control loop.
The literature has called this dynamic structure the *extended system* of the control problem.
The role of the extended system to cope with both external disturbances and model approximations will be objects of two specific sections.

To outline the rationale of the extended system we start from the control loop with cascade compensator 4.5 of chapter 4.

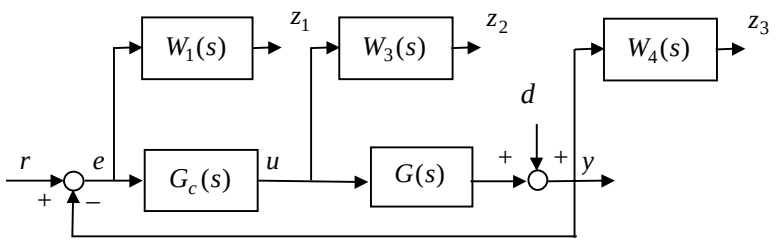

Fig. 5.1 Feedback control in the presence of external disturbances

In figure 5.1 G represents the plant, d are process disturbances transferred on the output, r is a reference signal, y are the plant controlled output, as well as the measures.
With z_i, $i = 1,2,3$ we indicate those signals of the controlled system that carries requirements, we called objectives. In particular z_1, characterizes the tracking error weighted by a filter W_1, z_2 is the control signal, as a response from disturbances or references, weighted by a function W_3, finally z_3 is the output error effect of disturbances weighted by W_4.
The weighting filters chosen for each objectives have the scope to specify the importance we assign to errors at the different frequencies.
Let assume all input signals of unitary norm, the objective of the control is to guarantee that the norms of the signals z_i is below to an assigned bound. With the freedom to select the gains of the weighting filters, conventionally the value 1 is chosen as the measure of achievement of requirements.
Generically w indicates the vector of external signals, u the control signals, z the objectives and y the measured outputs.

The control loop of figure 5.1 can be redrawn in the general form of 5.2 where the closed loop relationships between disturbances and objectives are evidenced explicitly. You can think of this closed loop operator as a generalized weighted form of the closed loop characteristic functions (4.11) and (4.12) discussed in the previous chapter.

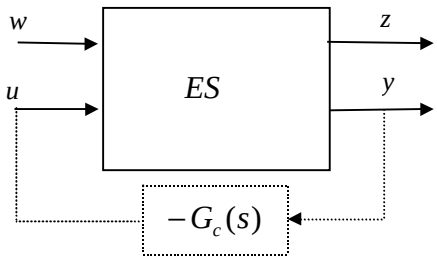

Fig. 5.2 Extended system in close loop – - performances

In the presence of model approximations the same closed loop assumes the form of figure 5.3. Discrepancies between process and model, indicated in the introduction chapter as Δ_m, are here represented by ΔW_{21}, where Δ is a norm bounded, but otherwise arbitrary operator describing the range of uncertainty, and W_{21} a chosen filter that assigns the relative magnitude on frequency of the uncertainty.

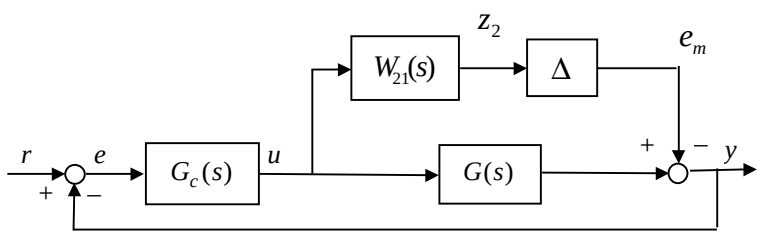

Fig. 5.3 Uncertainty on the process in a closed loop system

Also in this case if we assign to z_2, input of Δ, the role of objective and to $e_m = w$, output of Δ, the role of disturbance, the closed loop system assumes the form of the feedback of an extended system similar to figure 5.2.

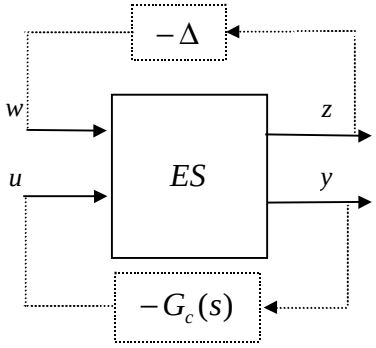

Fig. 5.4 Extended system in closed loop – robustness

However, while in figure 5.2 the closed loop operator emphasized the effect of the disturbances on the objective, here the operator Δ, dually with respect to G_c introduces an additional feedback with the consequence to modify the dynamic nominal behavior, and especially stability, at the changes of Δ of the controlled system. This justifies the definition of *robustness* control when stability or performances are guaranteed for all possible values of Δ, in a certain class.

In both cases the dynamic operator *ES* is described with a state variable representation in the following form:

$$\begin{bmatrix} \dot{x} \\ z \\ y \end{bmatrix} = \left[\begin{array}{c|cc} A & B_1 & B_2 \\ \hline C_1 & D_{11} & D_{12} \\ C_2 & D_{21} & 0 \end{array}\right] \cdot \begin{bmatrix} x \\ w \\ u \end{bmatrix} \tag{5.1}$$

or, alternatively by the corresponding transfer matrix

$$\begin{vmatrix} z \\ y \end{vmatrix} = \begin{bmatrix} G_{11} & G_{12} \\ G_{21} & G_{22} \end{bmatrix} \cdot \begin{vmatrix} w \\ u \end{vmatrix} \tag{5.2}$$

where $G_{11}, G_{12}, G_{21}, G_{22}$ are the four partitions of the extended system.

5.1.1 Linear fractional transformations

To perform analysis we will need explicit relationships between one pair of input-output, e.g. *z* e *w*, when the other pair *y* e *u* is closed by a control or viceversa by an uncertainty operator.
This operation involving the four operators corresponds in algebra to a *linear fractional transformation* (*LFT*) between two variables.

Feedback between y and u

In the first case if we are considering a control feedback a lower LFT is performed on the extended system

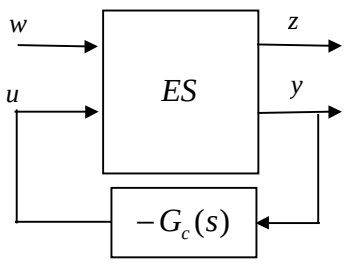

Fig. 5.5 Extended system with a feedback between *y* an *u*

Introduced the feedback as in figure 5.5 the closed loop operator is derived as follows

$$u = -G_c y$$

$$\begin{vmatrix} z \\ y \end{vmatrix} = \begin{bmatrix} G_{11} \\ G_{21} \end{bmatrix} \cdot w - \begin{bmatrix} 0 & G_{12}G_c \\ 0 & G_{22}G_c \end{bmatrix} \cdot \begin{vmatrix} z \\ y \end{vmatrix}$$

$$\begin{bmatrix} I & G_{12}G_c \\ 0 & I + G_{22}G_c \end{bmatrix} \cdot \begin{vmatrix} z \\ y \end{vmatrix} = \begin{bmatrix} G_{11} \\ G_{21} \end{bmatrix} \cdot w$$

$$\begin{vmatrix} z \\ y \end{vmatrix} = \begin{bmatrix} I & -G_{12}G_c\left(I + G_{22}G_c\right)^{-1} \\ 0 & \left(I + G_{22}G_c\right)^{-1} \end{bmatrix} \cdot \begin{bmatrix} G_{11} \\ G_{21} \end{bmatrix} \cdot w$$

$$\begin{vmatrix} z \\ y \end{vmatrix} = \begin{bmatrix} G_{11} - G_{12}G_c\left(I + G_{22}G_c\right)^{-1}G_{21} \\ \left(I + G_{22}G_c\right)^{-1}G_{21} \end{bmatrix} \cdot w \cdot \tag{5.3}$$

Feedback between z and w

Dually with respect to the previous case the presence of Δ between *z* and *w* will require an upper LFT to express the system as a function the uncertainty.

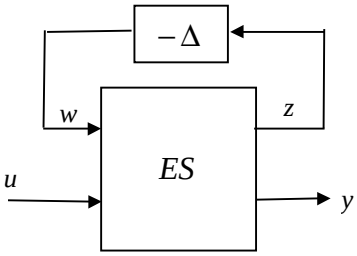

Fig. 5.6 Extended system with feedback between *z* e *w*

Algebraic manipulations give

$$w = -\Delta \cdot z$$

$$\begin{vmatrix} z \\ y \end{vmatrix} = \begin{bmatrix} G_{12} \\ G_{22} \end{bmatrix} \cdot u - \begin{bmatrix} G_{11}\Delta & 0 \\ G_{21}\Delta & 0 \end{bmatrix} \cdot \begin{vmatrix} z \\ y \end{vmatrix}$$

$$\begin{bmatrix} I + G_{11}\Delta & 0 \\ +G_{21}\Delta & I \end{bmatrix} \cdot \begin{vmatrix} z \\ y \end{vmatrix} = \begin{bmatrix} G_{12} \\ G_{22} \end{bmatrix} \cdot u$$

$$\begin{vmatrix} z \\ y \end{vmatrix} = \begin{bmatrix} (I + G_{11}\Delta)^{-1} & 0 \\ -G_{21}\Delta(I + G_{11}\Delta)^{-1} & I \end{bmatrix} \cdot \begin{bmatrix} G_{12} \\ G_{22} \end{bmatrix} \cdot u$$

$$\begin{vmatrix} z \\ y \end{vmatrix} = \begin{bmatrix} (I + G_{11}\Delta)^{-1} G_{12} \\ G_{22} - G_{21}\Delta(I + G_{11}\Delta)^{-1} G_{12} \end{bmatrix} \cdot u \tag{5.4}$$

5.1.2 Extended system applied to external signals

We use now previous lower LFT to analyze the most significant situations of sensitivity of the controlled system signals to external disturbances. Results of this and of the next section are taken from [1].

The control loop is the one of figure 5.1, We consider as external signal the reference *r* and as objective the difference *y*-*r*, tracking error between system output and reference. The requirement of the control is to guarantee the norm of the closed loop operator below a given value, where W_1, is a proper and stable transfer matrix weighting the error at the different frequencies. In this configuration *w* is coincident with *r*, and the extended system (5.2) assumes the form

$$\begin{vmatrix} z \\ y - r \end{vmatrix} = \begin{bmatrix} W_1 & -W_1 G \\ -I & G \end{bmatrix} \cdot \begin{vmatrix} r \\ u \end{vmatrix} \tag{5.5}$$

Applying the lower LFT (5.3), closing the loop between *y* and *u* we obtain

$$\begin{vmatrix} z \\ y-r \end{vmatrix} = \begin{bmatrix} W_1(I+GG_c)^{-1} \\ -(I+GG_c)^{-1} \end{bmatrix} \cdot r$$

Performances are defined by the transfer matrix between r and z. This is precisely the closed loop sensitivity function we have seen in the previous chapter. We can always chose the gain of W_1 such that requirement satisfaction can be set in the form

$$\left\| W_1(I+GG_c)^{-1} \right\|_\infty \le 1. \tag{5.6}$$

In term of performances result (5.6) offers an interesting interpretation, resulting from a property of the H_∞ norm, in fact it implies

$$\begin{aligned} &\bar{\sigma}(W_1)\bar{\sigma}\left((I+GG_c)^{-1}\right) \le 1 \quad \forall \omega \\ &\bar{\sigma}\left((I+GG_c)^{-1}\right) \le \bar{\sigma}(W_1)^{-1} \end{aligned} . \tag{5.7}$$

So, if we define with W_1 a proper boundary region in frequency represented by the reciprocal of its maximum singular value satisfaction of performances guarantees that the maximum singular value of the sensitivity function is always below this region. This is exactly a classical requirement of the sensitivity function in a control loop.

If, instead of the reference, we had chosen as external signal an additive disturbance localized on the output (e_m in the figure), and as objective the controlled system output, with the objective to guarantee a bound to the norm of the closed loop operator between disturbance and output, the extended system would be

$$\begin{vmatrix} z \\ y \end{vmatrix} = \begin{bmatrix} W_4 & +W_4G \\ I & G \end{bmatrix} \cdot \begin{vmatrix} e_m \\ u \end{vmatrix} \tag{5.8}$$

that becomes, after closing the feedback:

$$\begin{vmatrix} z \\ y \end{vmatrix} = \begin{bmatrix} W_4(1+GG_c)^{-1} \\ (1+GG_c)^{-1} \end{bmatrix} \cdot e_m$$

Performances, also in this case, involve the weighted closed loop sensitivity function.

$$\left\| W_4(I+GG_c)^{-1} \right\|_\infty \le 1.$$

Let consider, again, the reference as external signal and set requirements on the control activity needed in tracking the reference. The new extended system is

$$\begin{vmatrix} z \\ y-r \end{vmatrix} = \begin{bmatrix} 0 & W_3 \\ -I & G \end{bmatrix} \cdot \begin{vmatrix} r \\ u \end{vmatrix} \tag{5.9}$$

Closing the loop we obtain

$$\begin{vmatrix} z \\ y-r \end{vmatrix} = \begin{bmatrix} W_3 G_c (I+GG_c)^{-1} \\ -(I+GG_c)^{-1} \end{bmatrix} \cdot r$$

Performances require

$$\left\| W_3 G_c (I+GG_c)^{-1} \right\|_\infty \le 1 \qquad (5.10)$$

involving the closed loop control activity function G_{equ}.

We can integrate the two previous requirements, asking for a limited tracking error, in front of an acceptable control activity, with a new extended system

$$\begin{vmatrix} z_1 \\ z_2 \\ y-r \end{vmatrix} = \left[\begin{array}{c|c} W_1 & -W_1 G \\ 0 & W_3 \\ \hline -I & G \end{array}\right] \cdot \begin{vmatrix} r \\ u \end{vmatrix} \qquad (5.11)$$

Closing the loop

$$\begin{vmatrix} z_1 \\ z_2 \\ y-r \end{vmatrix} = \begin{bmatrix} W_1 (I+GG_c)^{-1} \\ W_3 G_c (I+GG_c)^{-1} \\ \hline -(I+GG_c)^{-1} GG_c \end{bmatrix} \cdot r$$

performances are referred to the two block operator

$$\left\| \begin{matrix} W_1 (I+GG_c)^{-1} \\ W_3 G_c (I+GG_c)^{-1} \end{matrix} \right\|_\infty \le 1 \qquad (5.12)$$

where, both, sensitivity function and control activity functions are present .
From a result of algebra we know that

$$\max\left\{ \left\| W_1 (I+GG_c)^{-1} \right\|_\infty , \left\| W_3 G_c (I+GG_c)^{-1} \right\|_\infty \right\} \le \left\| \begin{matrix} W_1 (I+GG_c)^{-1} \\ W_3 G_c (I+GG_c)^{-1} \end{matrix} \right\|_\infty \le 1 ,$$

hence, a bound on (5.12) implies the same bound to separately both requirements.

5.1.3 Extended system referred to the plant uncertainties

In this section we take into account only structural components, called in classical terms multiplicative disturbances. We have already represented the plant uncertainty as the dynamic operator difference between process and model $\Delta_m = G_p - G$.

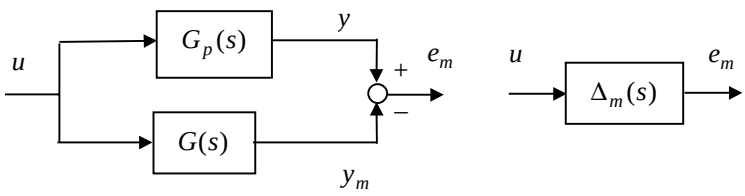

Fig. 5.7 Difference between process and model

This difference can have various origins:

- The process structure is known but some parameters are not, or they may change in time or are know only in a range of approximation;
- The process is known but some of its dynamics are willingly ignored for simplicity;
- The process present some non-linearity, while e want to design the control with linear techniques;
- Finally part of the process, especially at high frequencies, are unknown.

Unable to describe exactly the system, the objective of the representation is, at least, to characterize a region of uncertainty were we expect that the system will certainly stay, and this is achieved introducing the operator Δ_m.

The design will exploit conservatively the knowledge of the bound of this region, in order to guarantee performances and stability for any possible operator inside the region, hence also in the worst conditions. Obviously we desire to keep this region as small as possible among those generated with the same level of complexity of the model and that certainly contain the system. The most simple technique we have in the realm of linear invariant models to represent regions of uncertainty is through a representation in frequency, this call back weighting functions similar to those introduced at the beginning with reference to performances.

Let indicate with Δ an arbitrary linear, proper, invariant, BIBO dynamic operator, with the unique constraint to have limited H_∞ norm: $\|\Delta\|_\infty < 1$. This operator will parameterize all elements in the region of the system uncertainty. Characterization of the region can be achieved through few alternative schemes, the choice among one of them, based on the knowledge we have of the system, has the scope to guarantee the closest coverage of the region. Let introduce a strictly stable dynamic operator W_2, that represents the weight we assign to the uncertainty at each frequency. We will see that this operator is able to represent exactly different situations of structured uncertainty (unknown or changing parameters) or approximately unstructured uncertainty (presence of delays, parasitic dynamics not well identified, etc.). The uncertainty region is defined, through the variation of the operator Δ in the region defined by its bound in norm. The choice of one of these schemes must achieve operators W_2 stable with minimum norm.

Multiplicative uncertainty

This is the most common case. The system is described from the nominal model as

$$G_p = (I + \Delta \cdot W_2) \cdot G \tag{5.13}$$

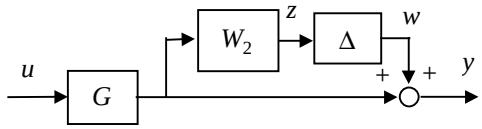

Fig. 5.8 Uncertainty in multiplicative form

Operator W_2 represents the relative uncertainty with respect to the nominal model.

This structure is used to describe changes in the system gain, or stable poles at high frequency ignored in the model. These ignored poles represent what is customarily called *parasitic dynamics.*

Example 5.1 Stable pole at high frequency ignored

The system has the following transfer function $G_p = \dfrac{1}{(s+1)(1+0.1 \cdot s)}$ were we want to ignore the pole in -10. The system is represented as follows:

$$G_p = \frac{1}{s+1} \cdot \left(1 + \Delta \frac{-0.1 \cdot s}{1+0.1 \cdot s}\right), \quad W_2 = \frac{-0.1 \cdot s}{1+0.1 \cdot s}$$

Additive uncertainty

The system is described as follows

$$G_p = G + \Delta \cdot W_2$$

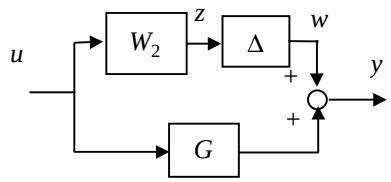

Fig. 5.9 Uncertainty in additive form

This form can be used, as example, to represent uncertainty on system zero in the right half plane.

Example 5.2 Uncertainty on zero in the right half plane

The system has the following transfer function $G_p = \frac{s-1+\alpha}{s+1}$ with $-0.5 \le \alpha \le +0.5$, it can be represented as follows:

$$G_p = \frac{s-1}{s+1} + \Delta \frac{0.5}{s+1}, \quad W_2 = \frac{0.5}{s+1}$$

Multiplicative uncertainty at denominator

This and the following schema re dual of the first two presented.

$$G_p = (1 + \Delta \cdot W_2)^{-1} G$$

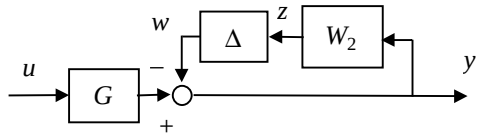

Fig. 5.10 Uncertainty in multiplicative form at denominator

This form is the proper one to ignore unstable system poles

Example 5.3 Ignored unstable pole

The system has the following transfer function $G_p = \frac{1}{(s+1)\cdot(s-1)}$. It can be represented by:

$$G_p = \frac{1}{(s+1)(s+10)} \cdot \left(1 - \Delta \frac{11}{s+10}\right)^{-1}, \quad W_2 = \frac{11}{s+10}$$

Additive uncertainty at denominator

This uncertainty description has the following form

$$G_p = (1 + G \cdot \Delta \cdot W_2)^{-1} G .$$

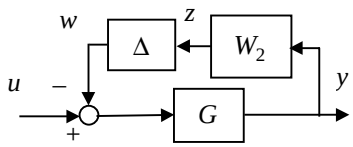

Fig. 5.11 Uncertainty in additive form at denominator

This scheme is useful to represent uncertainty in system poles.

Example 5.4 Additive uncertainty at denominator

The system has the following transfer function $G_p = \frac{1}{s+1-\alpha}$, where α is an unknown parameter with range $-2 \le \alpha \le +2$. The system can be represented in the following form

$$G_p = \frac{1}{s+1} \cdot \frac{1}{1 + \frac{2\Delta}{s+1}}$$

This example can be cast in the previous scheme with $G = \frac{1}{s+1}$ and $W_2 = 2$.

5.2 Stability, performance and robustness

5.2.1 Robust stability

Each representation of uncertainty is linked to a corresponding extended system, obtained by selecting as z and w input and output of the operator Δ, as shown in the previous figures. The transfer matrices for the different structures have the following representations:

1. First configuration

$$\begin{aligned} &z = W_2 G \cdot u, \quad w = \Delta W_2 G \cdot u \\ &y = w + G \cdot u \\ &\begin{vmatrix} z \\ y \end{vmatrix} = \begin{bmatrix} 0 & W_2 G \\ I & G \end{bmatrix} \cdot \begin{vmatrix} w \\ u \end{vmatrix} \end{aligned} \tag{5.14}$$

2. Second configurations

$$\begin{aligned} &z = W_2 \cdot u, \quad w = \Delta W_2 \cdot u \\ &y = w + G \cdot u \\ &\begin{vmatrix} z \\ y \end{vmatrix} = \begin{bmatrix} 0 & W_2 \\ I & G \end{bmatrix} \cdot \begin{vmatrix} w \\ u \end{vmatrix} \end{aligned}$$

3. Third configuration

$$\begin{aligned} &z = W_2 y, \quad w = \Delta W_2 \cdot y \\ &y = -w + G \cdot u \\ &\begin{vmatrix} z \\ y \end{vmatrix} = \begin{bmatrix} -W_2 & W_2 G \\ -I & G \end{bmatrix} \cdot \begin{vmatrix} w \\ u \end{vmatrix} \end{aligned}$$

4. Fourth configuration

$$\begin{aligned} &z = W_2 y, \quad w = \Delta W_2 \cdot y \\ &y = G \cdot (u - w) \\ &\begin{vmatrix} z \\ y \end{vmatrix} = \begin{bmatrix} -W_2 G & W_2 G \\ -G & G \end{bmatrix} \cdot \begin{vmatrix} w \\ u \end{vmatrix} \end{aligned}$$

All representations in closed loop show a similar block diagram, as in figure 5.12, with an additional feedback introduced by the uncertainty. With this structure, for a given control law, the behavior of the closed loop system when Δ changes can be analyzed.

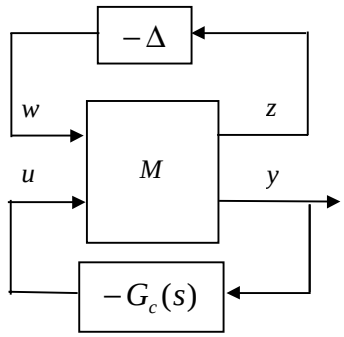

Fig. 5.12 Closed loop extended system in the presence of uncertainty

The feedback Δ, in this second loop, is a completely arbitrary BIBO operator with a bounded norm, hence the sign of the feedback is irrelevant.
Let indicate with G_{eq} the transfer matrix between *w* and *z*, resulting from closing the loop of the extended system in nominal conditions. Obviously G_{eq} must be asymptotically stable, in fact, $\Delta = 0$ is part of the uncertainty region.
We desire that performances and especially stability will be preserved for any value of the uncertainty in the admissible region.
Robust stability is the property of the control that guarantees stability not just for the nominal model, but for any model obtained from the uncertainty operator in the specified region. The property is stated by the next theorem.

Theorem 5.1 Robust stability ("Small gain theorem")

Let be G_{eq} an symptomatically stable transfer matrix, and Δ an arbitrary asymptotically stable operator with norm$H_{\infty} < 1$, then the feedback loop of G_{eq} and Δ is stable if and only if the loop gain satisfies

$$\left\|\Delta \cdot G_{eq}\right\|_{\infty} < 1, \quad \forall \Delta \in M(S), \left\|\Delta\right\|_{\infty} < 1 .$$

This implies that that stability is guaranteed by $\left\|G_{eq}\right\|_{\infty} \le 1$. Moreover for $\left\|G_{eq}\right\|_{\infty} > 1$ a value of Δ can always be found that make the closed loop system unstable.
The definition of "*Small gain theorem*" descends from the previous results, and was presented the first time by Zames in [2].

Let analyze the four previous structures at the light of the small gain theorem 5.1, applying a lower LFT involving *y* and *u*.
In the first case we have

$$\begin{vmatrix} z \\ y \end{vmatrix} = \begin{bmatrix} -W_2 G G_c (1+GG_c)^{-1} \\ (1+GG_c)^{-1} \end{bmatrix} \cdot w$$

Hence theorem 5.1 imposes for stability a condition involving the unitary feedback equivalent closed loop function

$$\left\| W_2 G G_c (1+GG_c)^{-1} \right\|_\infty = \left\| W_2 G_{eq1} \right\|_\infty < 1$$

In the second case the results is

$$\begin{vmatrix} z \\ y \end{vmatrix} = \begin{bmatrix} -W_2 G_c (1+GG_c)^{-1} \\ (1+GG_c)^{-1} \end{bmatrix} \cdot w$$

Robust stability refers to the closed loop control activity function

$$\left\| W_2 G_c (1+GG_c)^{-1} \right\|_\infty = \left\| W_2 G_{equ} \right\|_\infty < 1 \tag{5.15}$$

In the third case the *w*-*z* relationship is

$$\begin{vmatrix} z \\ y \end{vmatrix} = \begin{bmatrix} -W_2 (1+GG_c)^{-1} \\ -(1+GG_c)^{-1} \end{bmatrix} \cdot w$$

with conditions for robust stability on the loop sensitivity function

$$\left\| W_2 (1+GG_c)^{-1} \right\|_\infty = \left\| W_2 S \right\|_\infty < 1 \tag{5.16}$$

In the fourth case we have

$$\begin{vmatrix} z \\ y \end{vmatrix} = \begin{bmatrix} -W_2 (1+GG_c)^{-1} G \\ -(1+GG_c)^{-1} G \end{bmatrix} \cdot w$$

Robust stability is related to the sensitivity function linking input disturbances and outputs

$$\left\| W_2 (1+GG_c)^{-1} G \right\|_\infty = \left\| W_2 G_{eqd} \right\|_\infty < 1 .$$

We will see in the next section how performances and robustness integrate each other to offer a prototype of specification for problems of closed loop controls.

Example 5.5 Active suspension for cars

A car subject to road disturbances is represented in first approximation as a mass suspended on spring and damper. An active damper is a force control through an hydraulic motor of the suspended mass.
The model cal be represented by the following equation:

$$F = m\ddot{y} + \beta(\dot{y} - \dot{d}) + k(y - d)$$

where d, as disturbance, is the road surface level, y the vertical position of the car and F the input force by the hydraulic actuator

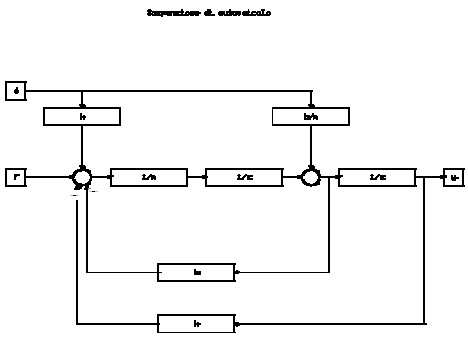

Fig. 5.13 Block diagram of the suspensions of a car

The parameter values are uncertain, in particular we assume the following description of the uncertainty

$$m = 2000(1 + 0.85\Delta_m);\ \beta = 225(1 + 0.8\Delta_\beta);\ k = 30000(1 + 0.5\Delta_k);$$

If we observe that uncertainty on the mass m is represented by the form of figure 5.8, the one of β and k by the form of figure 5.10, the block diagram of active suspensions taking into account uncertainty is the following

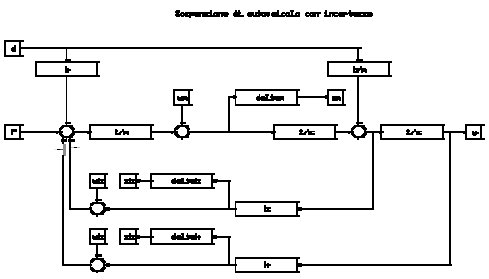

Fig. 5.14 Uncertainty in the suspensions of a car

Let close a control loop based on observer and state feedback positioning in nominal conditions the poles of the estimation errors, and those of the state feedback control in -10 ± 10 and -5 ± 5, respectively.
The three closed loop operators related to the three uncertainties (mass, damper and spring) separately have H_∞ norms with values $3.1, -35\ and\ -9.8\ dB$. We note that the mass uncertainty, only, is critical for the control stability. The small gain theorem is not satisfied. Very easily we can verify that with an uncertainty operator $\Delta_m = 1$ the closed loop system is unstable.

Let try to design a second control that guarantees robust stability, e.g. choosing observer and feedback with the objective to minimize the gramians of controllability and observability of the extended system of the figure 5.14. one solution is given by the observer with poles in $-182\,\mathrm{e}-82.5$ and the state feedback with poles in -9.56 ± 9.51. This guarantees norms of the uncertainty closed loop operators with values $0, -45\,\mathrm{e}-25\ dB$.

5.2.2 Robust performances

The extended system applied to external signals has been used to represent performances in nominal conditions, viceversa applied to uncertainties to derive robust stability conditions. A perfect duality exists between these two aspects, and the conditions refers to the same four closed loop operators $S, G_{eq1}, G_{equ}, G_{eqd}$, variously multiplied by weighting functions. For each performance specification a structure of uncertainty exists with similar condition, so that a constraint on one of the closed loop operators can apply either to one of the other of the two aspects of the specifications.
Let observe as an example how performance (5.6) and robust stability (5.16) or control activity requirements (5.10) and conditions (5.15) are similar. Verify, also, as exercise how conditions for robust stability in the first and fourth structure, not considered in section 5.1.2, are equivalent to performance specification involving input and output disturbances, respectively, versus outputs.
If performance and robustness conditions are jointly present in an extended system we can guarantee performances in nominal conditions and robust stability, as shown in the next example.

Example 5.6 Nominal performance and robust stability

Let consider the problem where performances, expressed by (5.5), are joint to the requirement of robust stability in the presence of multiplicative uncertainty (5.13).
The two conditions require, as we know:

$$\left\| W_1 \left(I + GG_c \right)^{-1} \right\|_\infty \le 1 \text{ and } \left\| W_2 GG_c \left(1 + GG_c \right)^{-1} \right\|_\infty = \left\| W_2 G_{eq1} \right\|_\infty < 1 . \qquad (5.17)$$

These requirements can be merged in a unique operator as shown in the next figure

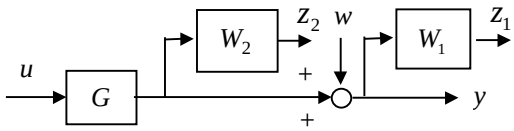

Fig. 5.15 Joint performance and robustness specifications

that from a result of algebra carries to

$$\max\left\{\left\|W_1\left(I+GG_c\right)^{-1}\right\|_\infty, \left\|W_2GG_c\left(I+GG_c\right)^{-1}\right\|_\infty\right\} \le \left\|\begin{matrix} W_1\left(I+GG_c\right)^{-1} \\ W_2GG_c\left(I+GG_c\right)^{-1}\end{matrix}\right\|_\infty \le 1 \quad (5.18)$$

More generally , however, we desire that not only stability but also performances are guaranteed in any uncertainty condition. This is a more stringent result than (5.18) and is indicated as *robust performances*.
Not all combinations of the four description of performances and robust stability integrate each other to define to a well posed problem of control with robust performances. We will consider here only two specific cases: when performance are described by (5.6), or (5.10) and uncertainty is multiplicative or additive. The next result consider the first of the two configurations, the other one can be obtained as simple extension.

Theorem 5.2 Robust performances

Let define nominal performances in (5.6)

$$\left\|W_1\left(I+GG_c\right)^{-1}\right\|_\infty \le 1, \quad (5.19)$$

and describe plant uncertainty in multiplicative form

$$G_p = \left(I+\Delta\cdot W_2\right)\cdot G, \quad \Delta\in R(S), \|\Delta\|_\infty < 1$$

then, sufficient condition to guarantee robust performance is:

$$\sup_\omega\left(\bar{\sigma}\left(W_1\left(I+GG_c\right)^{-1}(\omega)\right)+\bar{\sigma}\left(W_2\cdot GG_c\left(I+GG_c\right)^{-1}(\omega)\right)\right)\le 1 \quad (5.20)$$

where $\bar{\sigma}$ is the maximum singular value of the transfer matrix for any value of *w*.
Demonstration
Guaranteed performances in any uncertainty condition means

$$\left\|W_1\left(I+\left(I+\Delta\cdot W_2\right)\cdot G\cdot G_c\right)^{-1}\right\|_\infty \le 1, \quad \forall\Delta . \quad (5.21)$$

that can be rewritten as

$$\left\| W_1 \left(I + G \cdot G_c + \Delta \cdot W_2 \cdot G \cdot G_c \right)^{-1} \right\|_\infty \le 1 \quad \forall \Delta \tag{5.22}$$

where, with the loop return difference $I + G \cdot G_c$ as common factor, and remembering a property of max and min singular values of a matrix we obtain

$$\begin{aligned} &\left\| W_1 (I + GG_c)^{-1} \left(I + \Delta \cdot W_2 \cdot GG_c (I + GG_c)^{-1} \right)^{-1} \right\|_\infty \le \\ &\bar{\sigma}\left(W_1 (I + GG_c)^{-1}(\omega) \right) \frac{1}{1 - \bar{\sigma}\left(W_2 \cdot GG_c (I + GG_c)^{-1}(\omega) \right)} \le 1 \end{aligned} \tag{5.23}$$

that proves the theorem.

From (5.20) is evident that robust performance implies robust stability, as well.
Let analyze in more details joint conditions of performance and robustness. We indicate with

$$A = W_1 (I + GG_c)^{-1}, \quad B = W_2 \cdot GG_c (I + GG_c)^{-1} \tag{5.24}$$

the two matrices target of the requirements, and represent the values of the two norms $\|A\|_\infty$, $\|B\|_\infty$ or of the two maximum singular values $\bar{\sigma}(A(w)), \bar{\sigma}(B(w))$ on the two axes of a system of co-ordinate

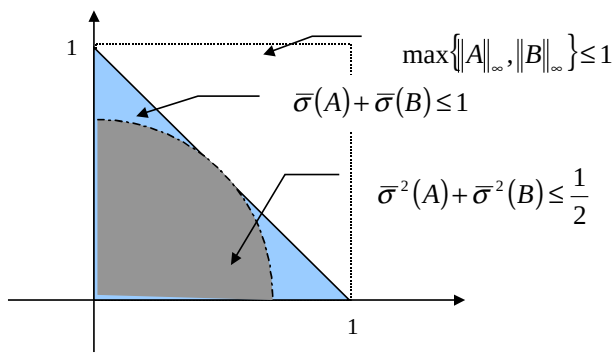

Fig. 5.16 Robust performances

We note that the square of side 1 characterizes the region where jointly nominal performance and robust stability are satisfied, the rectangular triangle with two sides 1 defines the region of robust performance, correctly is included in the first one. Finally the region delimited by the circle of ray $\frac{\sqrt{2}}{2}$ represents a sufficient condition for robust performance. This last result is interesting, as it defines a bound on the whole operator norm

$$\left\| \begin{matrix} A \\ B \end{matrix} \right\|_\infty^2 \le \frac{1}{2} \qquad \bar{\sigma}^2(A) + \bar{\sigma}^2(B) \le 1, \quad \forall \omega \tag{5.25}$$

but more restrictive than the original one.
Analogously nominal performances (5.12) stating a joint constraint in the loop sensitivity and control activity can be cast into robust performances

$$\max\left\{ \bar{\sigma}\left(W_1 (I + GG_c)^{-1}\right), \bar{\sigma}\left(W_3 G_c (I + GG_c)^{-1}\right) \right\} + \bar{\sigma}\left(W_2 \cdot GG_c (I + GG_c)^{-1}\right) \forall \omega .$$

5.2.3 *Structured robustness*

In the previous section we have preliminarily analyzed robust performances and stability in special cases and in the presence of a unique or unstructured source of uncertainty Δ. In this section we approach the problem in more general terms, and especially we consider the presence of more independent source of uncertainty as in figure 5.17. This is called *structured uncertainty*. Results of this section and formula at the end of the section are taken from chapter 11 of [3].

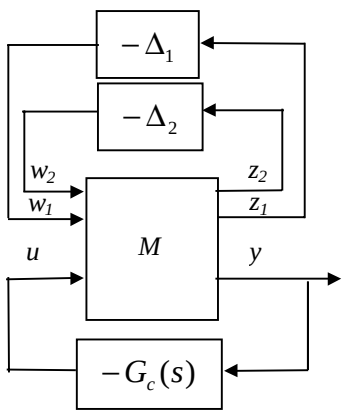

Fig. 5.17 Structured uncertainty

The advantage to exploit a structure is to offer tighter and more realistic regions in describing uncertainty, than aggregating all sources in a unique element Δ.
Theorem 5.2 applied to the operator between the signals w_1, w_2 and z_1, z_2 after closing the feedback

$$\begin{vmatrix} z_1 \\ z_2 \end{vmatrix} = G_{eq} \cdot \begin{vmatrix} w_1 \\ w_2 \end{vmatrix} = \begin{bmatrix} G_{eq11} & G_{eq12} \\ G_{eq21} & G_{eq22} \end{bmatrix} \cdot \begin{vmatrix} w_1 \\ w_2 \end{vmatrix}, \tag{5.26}$$

states that to guarantee robust stability the following condition must be satisfied

$$\left\| \Delta \begin{bmatrix} G_{eq11} & G_{eq12} \\ G_{eq21} & G_{eq22} \end{bmatrix} \right\|_\infty < 1, \quad \forall \Delta \subset M(S), \|\Delta\|_\infty \le 1 \tag{5.27}$$

If we want to take into account the structure of the uncertainty

$$\Delta = \begin{bmatrix} \Delta_1 & 0 \\ 0 & \Delta_2 \end{bmatrix}, \quad \forall \Delta_{1,2} \subset M(S), \|\Delta_{1,2}\|_\infty \le 1 \tag{5.28}$$

the result modifies in the following

Theorem 5.3 Structured robust stability

Let be the transfer matrix G_{eq} (5.26) asymptotically stable, and two arbitrary transfer matrices Δ_1, Δ_2 with the constraint to be proper, stable and with norm $H_\infty < 1$, then the feedback is robustly stable is and only if

$$\left\| \begin{bmatrix} \Delta_1 & 0 \\ 0 & \Delta_2 \end{bmatrix} \cdot \begin{bmatrix} G_{eq11} & G_{eq12} \\ G_{eq21} & G_{eq22} \end{bmatrix} \right\|_\infty < 1, \quad \forall \Delta_1, \Delta_2 \subset M(S), \|\Delta_1\|_\infty \le 1, \|\Delta_2\|_\infty \le 1 \tag{5.29}$$

and, equivalent to the previous condition, there exists an index μ_Δ of the transfer matrix G_{eq}, called maximum *structured singular value*, obviously lower than $\overline{\sigma}(G_{eq})$, such that

$$\mu_\Delta(G_{eq}) \le 1 .$$

Moreover, if $\mu_\Delta(G_{eq}) > 1$ a pair Δ_1, Δ_2 can always be found for which the feedback is unstable.
Finally, in these conditions the norm of each one of the two blocks on the diagonal is bounded when uncertainty is present on the other block only:

$$\|G_{eq11}\|_\infty < 1, \quad \forall \Delta_2 \subset M(S), \|\Delta_2\|_\infty \le 1 \text{ e } \|G_{eq22}\|_\infty < 1, \quad \forall \Delta_1 \subset M(S), \|\Delta_1\|_\infty \le 1$$

It has been proven that the value of μ_Δ is limited by the following inequalities

$$|\lambda|_{Max}(G_{eq}) \le \mu_\Delta(G_{eq}) \le \overline{\sigma}(G_{eq}) .$$

Compute the maximum structured singular value is not an easy task, nevertheless, if we note that result (5.29) remains unchanged with the introduction of a block diagonal matrix D commuting with the uncertainty, and that a loop characteristics is identical irrespective from the point we break the loop

$$\left\| D^{-1} \cdot \begin{bmatrix} \Delta_1 & 0 \\ 0 & \Delta_2 \end{bmatrix} \cdot D \cdot \begin{bmatrix} G_{eq11} & G_{eq12} \\ G_{eq21} & G_{eq22} \end{bmatrix} \right\|_\infty = \left\| \begin{bmatrix} \Delta_1 & 0 \\ 0 & \Delta_2 \end{bmatrix} \cdot D \cdot \begin{bmatrix} G_{eq11} & G_{eq12} \\ G_{eq21} & G_{eq22} \end{bmatrix} \cdot D^{-1} \right\|_\infty < 1, \tag{5.30}$$

$$\forall \Delta_1, \Delta_2 \subset M\,(S), \|\Delta_1\|_\infty \le 1, \|\Delta_2\|_\infty \le 1$$

where

$$D = \begin{bmatrix} d_1 I & 0 \\ 0 & d_2 I \end{bmatrix}, \quad d_1, d_2 \in \Re \cdot \tag{5.31}$$

we can obtain an empirical technique to evaluate an upper bound of μ_Δ.
Condition (5.30) is true for any *D*, as long as *D* commutes with the uncertainty operator and simplifies, so instead of computing the value of μ_Δ we can compute the lowest maximum singular value $\bar{\sigma}\left(D \cdot G_{eq} \cdot D^{-1}\right)$ as function of *D*:

$$\begin{aligned} \mu_\Delta\left(G_{eq}\right) &\le \inf_D \bar{\sigma}\left(D \cdot \begin{bmatrix} G_{eq11} & G_{eq12} \\ G_{eq21} & G_{eq22} \end{bmatrix} \cdot D^{-1} \right) = \\ &\inf_\gamma \bar{\sigma}\left(\begin{bmatrix} G_{eq11} & \gamma \cdot G_{eq12} \\ \gamma^{-1} \cdot G_{eq21} & G_{eq22} \end{bmatrix} \right), \quad \gamma = \frac{d_1}{d_2} \end{aligned} . \tag{5.32}$$

This idea can be applied to any dimension of the structure (number of sources) of the uncertainty. Unfortunately equality is not reached when structure has dimension greater than 3, nevertheless, we found in all practical applications remarkable results.
Returning to (5.32), from a result on singular values of *structured matrices* we can re-write the upper bound of μ_Δ in terms of the norms of each partition of the matrix

$$\begin{aligned} \mu_\Delta\left(G_{eq}\right) &\le \inf_\gamma \bar{\sigma}\left(\begin{bmatrix} \bar{\sigma}\left(G_{eq11}\right) & \gamma \cdot \bar{\sigma}\left(G_{eq12}\right) \\ \gamma^{-1} \cdot \bar{\sigma}\left(G_{eq21}\right) & \bar{\sigma}\left(G_{eq22}\right) \end{bmatrix} \right) \\ &\le \sqrt{\inf_\gamma \left(\bar{\sigma}\left(G_{eq11}\right)^2 + \gamma^2 \cdot \bar{\sigma}\left(G_{eq12}\right)^2 + \gamma^{-2} \cdot \bar{\sigma}\left(G_{eq21}\right)^2 + \bar{\sigma}\left(G_{eq22}\right)^2 \right)} \\ &= \sqrt{\bar{\sigma}\left(G_{eq11}\right)^2 + \bar{\sigma}\left(G_{eq22}\right)^2 + 2 \cdot \bar{\sigma}\left(G_{eq12}\right)^2 \cdot \bar{\sigma}\left(G_{eq21}\right)^2} \end{aligned} \tag{5.33}$$

with

$$\gamma_{\min}^2 = \frac{\bar{\sigma}\left(G_{eq21}\right)^2}{\bar{\sigma}\left(G_{eq12}\right)^2}, \quad \bar{\sigma}\left(G_{eq12}\right)^2 \ne 0 \cdot \tag{5.34}$$

This result can be specialized to account for different specifications: with the next example we will consider a case of multiple uncertainty, in the next section we obtain robust performances (5.20) with an alternative technique.
As concluding remark, note that the matrix *D* doesn't affect the norms of each restriction on the diagonal of G_{eq}.

In general we may have multiple sources of uncertainty or the same source repeated on different channels, the matrix D assumes in general the following form

$$D = \begin{bmatrix} D_1 & & \\ & D_i & \\ & & I \end{bmatrix}, \; D_i = \begin{cases} Id_i \Leftrightarrow \Delta_i \\ D_i \Leftrightarrow I\delta_i \end{cases}. \tag{5.35}$$

Example 5.7 Multiple uncertainty

The considered process has two sources of uncertainty: gain variations, and not fully specified dynamics. In one of the next chapters this model will be applied to a concrete control problem. We want evaluate robust stability in the presence of this structured uncertainty. The system is the following.

$$\tilde{G}(s) = \frac{k(1+k_2\Delta_2)}{s\left(s^2+a_1 s+a_0+k_1\Delta_1\right)} = \frac{k(1+W_2\Delta_2)}{s\left(s^2+a_1 s+a_0\right)\left(1+W_1\Delta_1\right)}, \quad |\Delta_1|, |\Delta_2| < 1$$

$$W_1 = \frac{k_1}{\left(s^2+a_1 s+a_0\right)}, \quad W_2 = k_2$$

We integrate in the same extended system the two sources of uncertainty corresponding to the first and third form of section 5.1.3,

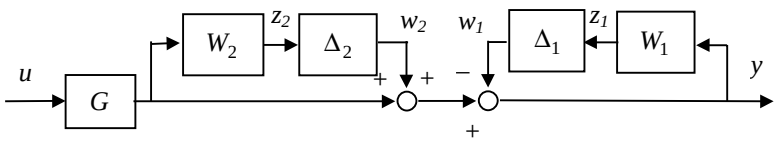

Fig. 5. 18 Two sources of uncertainty

The resulting extended system is

$$\begin{vmatrix} z_1 \\ z_2 \\ y \end{vmatrix} = \left[\begin{array}{cc|c} W_1 & -W_1 & W_1 G \\ 0 & 0 & W_2 G \\ \hline I & -I & G \end{array}\right] \cdot \begin{vmatrix} w_1 \\ w_2 \\ u \end{vmatrix} \tag{5.36}$$

applying, as usual a lower LFT we obtain for the closed loop

$$\begin{vmatrix} z_1 \\ z_2 \end{vmatrix} = \begin{bmatrix} W_1\left(I+GG_c\right)^{-1} & -W_1\left(I+GG_c\right)^{-1} \\ -W_2 GG_c\left(I+GG_c\right)^{-1} & W_2 GG_c\left(I+GG_c\right)^{-1} \end{bmatrix} \cdot \begin{vmatrix} w_1 \\ w_2 \end{vmatrix}$$

Applying the result (5.33) the condition for robust stability become

$$\sup_{\omega}\left(\bar{\sigma}\left(W_1\left(I+GG_c\right)^{-1}(\omega)\right)+\bar{\sigma}\left(W_2\cdot GG_c\left(I+GG_c\right)^{-1}(\omega)\right)\right)\leq 1 \tag{5.37}$$

Given the formal equivalence (duality) between performances and robustness conditions, must not surprise that the result just achieved is identical to robust performance of the theorem 5.2. This argument will be fully clarified in the next section.

Example 5.8 Hydraulic motor – nonlinearity treated as multiple uncertainty

Hydraulic servomotor is a classical actuator for power mechanical controls. It is characterized by a marked nonlinearity. The model will be described in details in on of the next chapters. Here we present, without justifications the block diagram showing the nonlinearity.

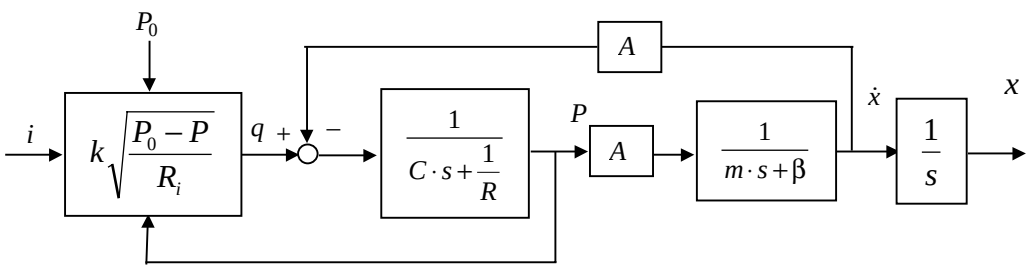

Fig. 5.19 Block diagram of an hydraulic servomotor

Linearizing the model we obtain the next schema

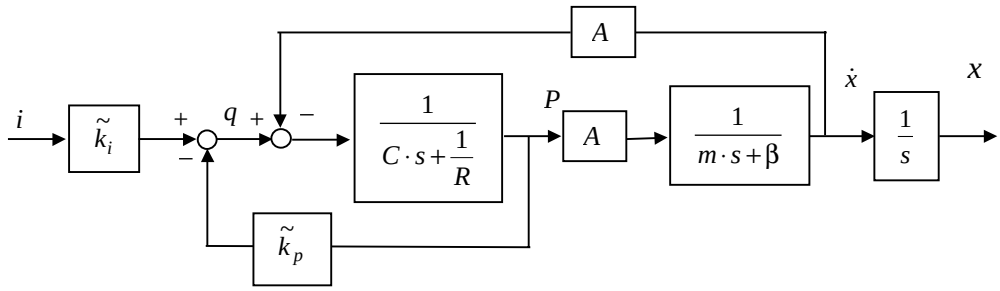

Fig. 5.20 Block diagram of the linearized model

Where the linearization parameters $\tilde{k}_i = k \cdot \sqrt{1 \pm \frac{P}{P_0}}; \tilde{k}_P = \frac{k \cdot |i|}{P_0 \cdot \sqrt{1 \pm \frac{P}{P_0}}}$ are assumed affected by two source of uncertainty

$\tilde{k}_i = \bar{k}_i (1 + d_1 \delta_1); \tilde{k}_P = \frac{d_2 \cdot \delta_2}{(1 + d_1 \delta_1)}$

The extended system is contained in the next figure

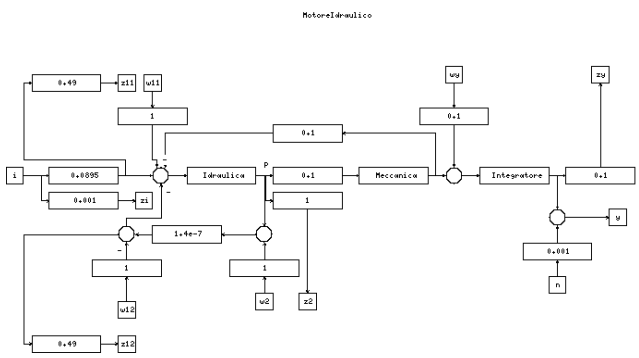

Fig. 5.21 Extended system of an hydraulic motor representing uncertainty

The system has a structure as in figure 5.17, where the two sources of uncertainty are $\Delta_1 = \begin{bmatrix} 1 & \\ & 1 \end{bmatrix} \cdot \delta_1;\ \Delta_2 = \delta_2$

Model parameters can be read from the figure, with equations of the dynamics given by:

Hydraulics - $\dot{x} = -10^{-2} x + 10^{8} u$

Mechanics - $\ddot{x} = -4.12\dot{x} + 10^{-2} u$

We adopt, as usual, a closed loop control with observer and state feedback assigning the poles for the observer $-100 \pm 100, -10$ and for the state feedback $-20 \pm 20, -5$. The H_∞ norm of the closed loop operator $\begin{bmatrix} w_1 \\ w_2 \end{bmatrix} \to \begin{bmatrix} z_1 \\ z_2 \end{bmatrix}$ assumes the value of 10^7. The value of μ_Δ is much smaller and is equal to 35, computed with the matrix $D = diag(78.4,\ 627,\ 2.2e-5,\ 74.3, 1)$.

The control isn't robustly stable, as it can immediately verified by introducing proper perturbation parameters in the closed loop.

A different control, designed to offer robust stability, using again observer and state feedback, is obtained minimizing the controllability and observability gramians of the closed loop[9]. The closed loop poles for the observer are $-45 \pm 127, -91.6$ and for the state feedback $-49.7 \pm 89, -0.104$, the H_∞ norm of the closed loop is still high ($3 \cdot 10^6$), nevertheless the value of μ_Δ is below 1, computed with a matrix $D = diag(98, 147,\ 2.3e-5, 1.58, 1)$. In this condition the control is robust, as it can be verified experimentally.

Robust performances

The same technique of handling structured uncertainty with multiple diagonal blocks in Δ allows to approach in more general terms the problem of robust performances, we have solved preliminarily for a special case previously.

Let go back to figure 5.17, where we hypothesize that the pair w_1, z_1 represents performances (sensitivity), while the second pair w_2, z_2, together with Δ_2, represents multiplicative uncertainty, and let approach a robust performance problem.

Theorem 5.3 shows that robust performance can be translated in a problem of robust stability with structured uncertainty. In fact, Δ_2 represents the real uncertainty, viceversa the block Δ_1 is introduced only as a proof that the norm of the performance

[9] We do not claim that minimizing the closed loop gramians, equivalent to minimize the H_2 norm of the closed loop operator, is the best thing to do to achieve robustness, as it depends instead from the H_∞ norm. However it moves in the right direction

restriction never reach the bound 1. In other words if the structured singular value is less than 1 robust performance is satisfied, i.e.

$$\mu_\Delta\left(G_{eq}\right) \le 1 \Leftrightarrow \left\|G_{eq11}\right\|_\infty < 1, \quad \forall \Delta_2 \subset M\,(S), \left\|\Delta_2\right\|_\infty \le 1 .$$

The results are applied to a problem of robust performance where requirements are given to the tracking error with model (5.5) and uncertainty is described by the model (5.14), The extended system is the following

$$\begin{vmatrix} z_1 \\ z_2 \\ y-r \end{vmatrix} = \left[\begin{array}{cc|c} W_1 & -W_1 & -W_1 G \\ 0 & 0 & W_2 G \\ \hline -I & I & G \end{array}\right] \cdot \begin{vmatrix} r \\ w \\ u \end{vmatrix} . \tag{5.38}$$

Closing the loop, and taking into account (5.3), we obtain

$$\begin{vmatrix} z_1 \\ z_2 \end{vmatrix} = \begin{bmatrix} W_1\left(I+GG_c\right)^{-1} & -W_1\left(I+GG_c\right)^{-1} \\ W_2 GG_c\left(I+GG_c\right)^{-1} & -W_2 GG_c\left(I+GG_c\right)^{-1} \end{bmatrix} \cdot \begin{vmatrix} r \\ w \end{vmatrix} \tag{5.39}$$

If we apply to model (5.39) theorem 5.3, using the result (5.33) we rediscover the conditions for robust performance of theorem 5.2. If we adopt, instead, the notation introduced with formula (5.24) the closed loop system can be rewritten as

$$\begin{bmatrix} W_1\left(I+GG_c\right)^{-1} & -W_1\left(I+GG_c\right)^{-1} \\ W_2 GG_c\left(I+GG_c\right)^{-1} & -W_2 GG_c\left(I+GG_c\right)^{-1} \end{bmatrix} = \begin{bmatrix} A \\ B \end{bmatrix} \cdot \begin{bmatrix} I & -I \end{bmatrix} \tag{5.40}$$

Its maximum singular value can be written

$$\begin{aligned} \overline{\sigma}^2(M) &= \lambda_{Max}\left(\begin{bmatrix} A \\ B \end{bmatrix} \cdot \begin{bmatrix} I & -I \end{bmatrix} \begin{bmatrix} I \\ -I \end{bmatrix} \cdot \begin{bmatrix} A & B \end{bmatrix}\right) \\ &= 2\lambda_{Max}\left(\begin{bmatrix} A \\ B \end{bmatrix} \cdot \begin{bmatrix} A & B \end{bmatrix}\right) = 2\lambda_{Max}\left(\begin{bmatrix} A & B \end{bmatrix} \cdot \begin{bmatrix} A \\ B \end{bmatrix}\right) \\ &= 2\overline{\sigma}^2\left(\begin{bmatrix} A \\ B \end{bmatrix}\right) \le 1 \Leftrightarrow \left\|\begin{bmatrix} A \\ B \end{bmatrix}\right\|_\infty \le \frac{\sqrt{2}}{2} \end{aligned} \tag{5.41}$$

We have found again the result (5.25).

Example 5.9 Position control of an electric motor

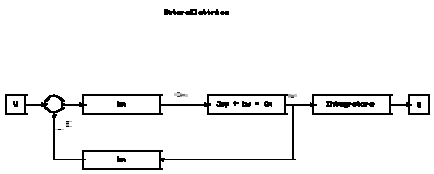

Fig. 5.22 Armature control of an electric motor

Figure 5.22 contains the block diagram of an electric motor controlled on the armature. The nonlinearity of the electromechanical characteristics of the motor suggest to approximate the parameter k_m as $\bar{k}_m(1+\delta_k\Delta)$. The motor shaft is subject to external torque disturbances and we want to limit these disturbance effects on the motor output position. Moreover the control activity must be limited. The resulting extended system is in figure 5.23.

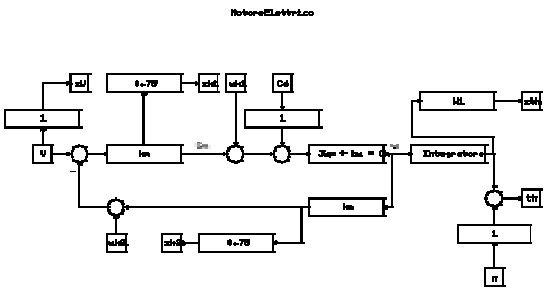

Fig. 5.23 Extended system of the electric motor controlled on the armature

Parameters are as follows:

- Motor - $\bar{k}_m = 1, \delta_k = 0.75$
- Mechanics - $J\dot{\omega} + \beta\omega = C_m$, $J = 0.05, \beta = 0.05$
- Performance weight - $W_1 : \dot{x} = -x + 100u$

If we design a control structure with observer poles $\lambda_o = -20.9, -1.65$ and state feedback poles $\lambda_c = -5.92 \pm 6.42, -21$ (this choice minimizes the H_2 norm of

the closed loop operator). You can verify that the H_∞ norm is $\|G_{eq}\|_\infty \le 141$, while the maximum structured singular value is $\mu_\Delta(G_{eq}) \le 63$.

In conclusion the control has not achieved robust performances.

If we try to reduce directly μ_Δ robust performance for this problem may be reached. The techniques will be lengthily discussed in the main chapter of the book later.

Computing technique

The diagonal matrix *D* in (5.31) that approximate the upper bound of maximum structured singular value can be compute empirically when the structure is square with an identical dimension of signals *w* and *z*, using the following formula:
In the case of two blocks

$$D = \begin{bmatrix} d_{11} I & \\ & I \end{bmatrix}, \; d_{11} = \begin{cases} 0 \text{ se } G_{21} = 0 \\ \sqrt{\dfrac{\|G_{21}\|}{\|G_{12}\|}} \text{ se } G_{21} \neq 0 \text{ e } G_{21} \neq 0 \\ \infty \text{ se } G_{12} = 0 \end{cases} \tag{5.42}$$

In the case of multiple blocks solution is obtained iterating on the following formula

$$D = \begin{bmatrix} d_1 I & & \\ & d_k I & \\ & & I \end{bmatrix}, \; d_k^4 = \frac{\prod_{i \neq k} \|G_{ik}\|^2 d_i^2}{\prod_{i \neq k} \|G_{ki}\|^2 / d_i^2} \tag{5.43}$$

These formula can be found at page 296 of [3].

5.2.4 Conclusions

The extended system shows to be a versatile tool to unify in a common representation the envelop of requirements and the different sources of uncertainty present in the system of a control problem. Consider each requirement or source of uncertainty in isolation, e.g. disturbance rejection or steady state gain changes, and the restriction of the closed loop operator referring to the corresponding pair disturbance-objective. If the H_∞ norm of this restriction is less than one performance is satisfied in nominal conditions or robust stability is guaranteed with respect to one source of uncertainty. When all conditions are satisfied for each pair disturbance-objective then the design of the control is inside a hyper-cube with late one as in figure 5.16: nominal performances and robust stability when only one source of uncertainty at the time is present.
Previous conditions doesn't guarantee neither that the H_∞ norm of the whole operator will be less than one, nor that performances are guaranteed robustly. Obviously norm less than one of the whole operator is a sufficient condition to achieve robust performances, but it will rarely satisfied. In this case the design is represented by a point located inside an hyper-sphere, similarly to what is shown in figure 5.16. In the case of a pair of

independent specification this implies the classical condition (5.41) with a circle of ray $\frac{\sqrt{2}}{2}$.

The maximum structured singular value of the closed loop transfer matrix less than one is a necessary and sufficient condition for robust performance. The design is represented by a point inside a polyhedron of unitary axes as the region show in figure 5.16. An upper bound of the maximum structured singular value (offering, hence, just sufficient conditions) can be tested minimizing the H_∞ norm of the operator weighted by a diagonal matrix as shown in the inequality (5.32).

5.3 Bibliography

[1] P. Colaneri, J. C. Geromel, A. Locatelli, “Control Theory and Design: an H_2 and H_∞ viewpoint” Academic Press, S. Diego, 1997

[2] G. Zames, “On the input-output stability of nonlinear time varying feedback systems, parts I and II” IEEE trans. Auto. Control, vol. AC-11(2), pp. 228-238, AC11(3) pp. 465-476, 1966.

[3] K. Zhou, J. Doyle, K. Glover, “Robust and Optimal Control”, Prentice Hall, Upper Saddle River, N. J. 07458 1995