Appendix A1

GUARANTEED NORM RESULTS

We offer in this appendix a sketch of proof of the main results in H_∞ theory. From these results it will be easy to show why the black box model is in general robust in guaranteeing closed loop performances of the output feedback control even if the conditions of the theory are loosely respected.

A1.1 Inners and contraction mapping

Definition A1.1 *Inner*

If an asymptotically stable dynamic system $y = G \cdot u$ is inner then

$$\bar{\sigma}(w) = 1 \quad \forall w$$

and also

$$\|y\|_2 = \|u\|_2 \quad \forall u$$

Proof of theorem 7.2 *Contraction mapping*

The proof of theorem 7.2 follows the next steps:
Consider the decomposition observer-feedback adopting the operator (7.36) resulting from the observer error, and performs the following transformation

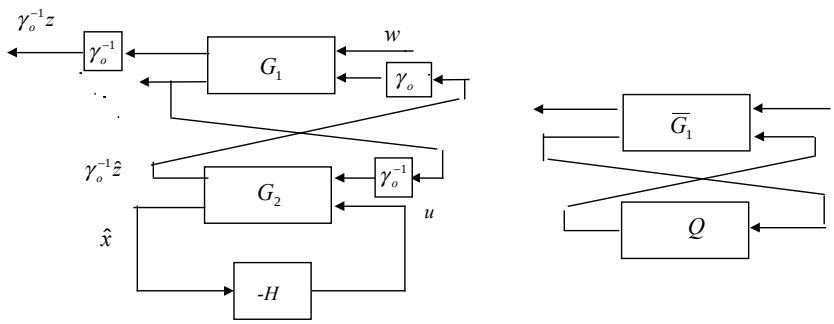

Fig. A1.1 Decomposition observer-feedback

The resulting system

$$\begin{bmatrix} \dot{\hat{e}} \\ \gamma_o^{-1}z \\ \hat{e}_y \end{bmatrix} = \overline{G}_1 \cdot \begin{bmatrix} w \\ \gamma_o^{-1}\hat{z} \end{bmatrix} = \left[\begin{array}{c|cc} A-KC_2 & B_1-KD_{21} & -\gamma_o L \\ \hline \gamma_o^{-1}C_1 & 0 & I \\ C_2 & D_{21} & 0 \end{array}\right] \cdot \begin{bmatrix} \hat{e} \\ w \\ \gamma_o^{-1}\hat{z} \end{bmatrix} \tag{A1.1}$$

is proven to be an inner. For the conditions of the theorem ($\gamma_c < \gamma_o$) the operator Q has H_∞ norm less than one.

The feedback in A1.1 is a contraction mapping, so the resulting closed loop system is asymptotically stable.

Finally because of the inner property of the operator the norms of input and output signals are related by the following expression

$$\|z\|_2^2 + \gamma_o^2 \|\hat{e}_y\|_2^2 = \gamma_o^2 \|w\|_2^2 + \|\hat{z}\|_2^2 \tag{A1.2}$$

$$\|z\|_2^2 = \gamma_o^2 \|w\|_2^2 + \|\hat{z}\|_2^2 - \gamma_o^2 \|\hat{e}_y\|_2^2 \le \gamma_o^2 \|w\|_2^2 - \gamma_o^2 (1-\varepsilon) \|\hat{e}_y\|_2^2, \quad \varepsilon = \frac{\gamma_c}{\gamma_o} < 1 \tag{A1.3}$$

which proves the theorem.

A1.2 Robustness of the black box model

We want to show why, in general it is not needed that γ_o represents the achievable performance, but it can be a greater value and still the black box model with its state feedback operator norm, and the observer error operator norm, jointly guarantee desired performances of the closed loop system.

The basic point is to choose the best observer with a guaranteed bound norm obtained using the algorithm described in corollary 7.2. In many cases, especially if the selected

bound γ_o is relatively high, the achieved H_∞ norm of the estimation error operator can be much smaller. Let indicate the achieved norm γ_{ov} and assume that $\gamma_{ov} << \gamma_o$.
From this observer in the worst disturbance conditions we build the black box model used to design the feedback. Let say that a feedback is found with a closed loop operator norm γ_{cv}. If simply the condition $\gamma_{cv} < \gamma_o$ is verified, previous theorem is satisfied and the closed loop operator norm is bounded by γ_o, as in the classical H_∞ control. However, if a stronger condition is verified $\gamma_{cv} << \gamma_o$ then we have the following further result.
We remember that (A1.1) is an inner, the operators $\overline{G}_1(1,2)$ and $\overline{G}_1(2,1)$ have H_∞ norm equal 1. Moreover, the operator

$$\overline{G}_1(1,1) = \left[\begin{array}{c|c} A - KC_2 & B_1 - KD_{21} \\ \hline \gamma_o^{-1} C_1 & 0 \end{array}\right],$$

and Q, have norm much smaller than one

$$\left\|\overline{G}_1(1,1)\right\|_\infty = \frac{\gamma_{ov}}{\gamma_o}, \left\|Q\right\|_\infty = \frac{\gamma_{cv}}{\gamma_o}. \tag{A1.4}$$

Considering the second output of (A1.1), we can write:

$$\begin{aligned} &\hat{e}_y = \overline{G}_1(2,1)w + \overline{G}_1(2,2)\gamma_o^{-1}\hat{z} = \overline{G}_1(2,1)w + \overline{G}_1(2,2)Q\hat{e}_y \\ &\left(I - \overline{G}_1(2,2)Q\right)\hat{e}_y = \overline{G}_1(2,1)w \\ &\hat{e}_y = \left(I - \overline{G}_1(2,2)Q\right)^{-1}\overline{G}_1(2,1)w \end{aligned} \tag{A1.5}$$

Because $\left\|\overline{G}_1(2,2)\right\|_\infty \le 1$, as a restriction of an inner, we have also $\left\|\overline{G}_1(2,2)Q\right\|_\infty \le \frac{\gamma_{cv}}{\gamma_o}$ negligible with respect to one, so we can say that

$$\left\|\hat{e}_y\right\|_2^2 \approx \left\|w\right\|_2^2 \tag{A1.6}$$

Considering, now, the first output of (A1.1)

$$\gamma_o^{-1} z = \overline{G}_1(1,1)w + \overline{G}_1(1,2)\gamma_o^{-1}\hat{z} \tag{A1.7}$$

substituting $\gamma_o^{-1}\hat{z} = Q\hat{e}_y$ we have

$$\begin{aligned} &\gamma_o^{-1} z = \overline{G}_1(1,1)w + \overline{G}_1(1,2)Q\left(I - \overline{G}_1(2,2)Q\right)^{-1}\overline{G}_1(2,1)w \\ &z = \gamma_o \overline{G}_1(1,1)w + \overline{G}_1(1,2)\gamma_o Q\left(I - \overline{G}_1(2,2)Q\right)^{-1}\overline{G}_1(2,1)w \end{aligned} \tag{A1.8}$$

taking into account (A1.4), approximately we can write the following bound in norm

$$\left\|z\right\| \le \left(\gamma_{ov} + \gamma_{cv}\right)\left\|w\right\| \tag{A1.9}$$

i.e. the closed loop norm will be no worse than the sum of achieved observer error and state feedback norms. But this is a worst case bound, and, in general, the actual norm will be dominated by the worst between observer and feedback bounds.
This result has been confirmed by most of the examples we have developed so far.