Chapter 3

DYNAMICAL SYSTEMS AND FUNCTIONAL SPACES

The performance of a controlled system is evaluated from its response to external inputs. They may be external disturbances and we want a small sensitivity of the controlled outputs from disturbances; or reference signals and we want a small tracking error. These signals may be the consequence of uncertainties or approximation errors between process and model (multiplicative disturbances), and we want that they do not affect closed loop stability of the plant, once the control design guarantees nominal stability for the model.

To quantify the desired performances it is necessary to assign measures to inputs and outputs signals.

Defining signals on proper linear spaces, different types of measures can be defined, e.g. measuring the energy of a signal, its power, its maximum value in frequency. These measures are called norm, and generalize the classical concept of distance in the vector Euclidean spaces.

A dynamic operator in its transformation establishes a mapping between an input and an output signal space. The definition of a norm on each one of the two spaces induces a norm, as well, on the dynamic operator. This induced norm can be consider for all practical effects a generalization of a gain as we intend it in electronic amplifiers.

The induced norm of the controlled dynamic operator will become the fundamental element to establish and verify performances of our control design.

This chapter presents the view of dynamic systems as input-output operators introducing a transformation between two spaces of functions, defines the signal norms of interest for our approach, and shows how to compute them. These results will be needed for the analysis and design of the successive chapters. The operator norm adopted will be H_2 and H_∞, the subject can be found on almost all texts of modern system theory and of H_∞ robust control, e.g. [1] [2]. Specifically for more details we suggest reference [3] that we followed for our elemental introduction.

3.1 Norm in functional spaces

A linear space of functions is a set whose elements are scalar, vectors, or matrix of real or complex function of an independent variable that can be real or complex. In the case of signals they will be function of time defined in the interval $(-\infty,+\infty)$, or more usually, for causal signals, in the interval $[0,+\infty)$. When we deal with the transform of sig-

nals they will be complex functions of the variable s ranging on the imaginary axis jw or z ranging on the unit circle $e^{jw\Delta}$.
Different types of norm can be defined over these spaces of signals. The norm is a function, indicated with $\|\cdot\|$ that associates to each element u of the space of functions a real value with the following properties:

$$\begin{aligned} &1) \quad \|u\| \geq 0; \\ &2) \quad \|u\| = 0 \qquad u(t) = 0 \quad \forall t; \\ &3) \quad \|au\| = |a| \cdot \|u\| \quad a \in \Re; \\ &4) \quad \|u+v\| \leq \|u\| + \|v\| \end{aligned} \tag{3.1}$$

We will be interested in three different classes of signals:

- finite energy signals, with the H_2 norm, that measures the integral in frequency of the signal transform equivalent to the energy of the signal,
- signals finite in frequency, with the H_∞[5] norm, that measures the maximum modulus in frequency of the signal transform.
- finite power signals, with the semi-norms P and S, that measure average power of a signal.

3.1.1 The norm H_2

The scalar case

The H_2 norm applies to the space of functions with finite energy

$$\|u\|_2 = \left(\int_0^\infty u(\tau)^2 d\tau \right)^{\frac{1}{2}}. \tag{3.2}$$

For these signals the transform is rational, becomes zero at infinite and it is bounded in the right half plane, i.e. the transform is strictly proper and has no poles in the right plane extended to the imaginary axis. For the Parseval theorem the norm can be written also

$$\|u\|_2 = \left(\frac{1}{2\pi} \int_{-\infty}^{+\infty} |U(j\omega)|^2 d\omega \right)^{\frac{1}{2}} \tag{3.3}$$

The vector case

In the vector or matrix case the norm H_2 assumes the following form

[5] The symbol H derives from the name of the mathematician Hardy that studied these spaces

$$\|u\|_2 = \left(\frac{1}{2\pi} \int_0^{\infty} tr\left(U^*(j\omega) \cdot U(j\omega)\right) dj\omega \right)^{\frac{1}{2}} \tag{3.4}$$

where U^* is the transpose complex conjugate of U and *tr*(.) indicates the *trace* of the argument matrix, defined as the sum of the diagonal elements of a matrix.

Example 3.1 Trace of the square form $U^*(j\omega) \cdot U(j\omega)$

Let consider the transfer function matrix

$$U(s) = \begin{vmatrix} \frac{1}{s+1} & \frac{1}{s+3} \\ 0 & \frac{1}{s+2} \end{vmatrix} \tag{3.5}$$

note that

$$U^*(j\omega) \cdot U(j\omega) = \begin{vmatrix} \frac{1}{\omega^2+1} & \frac{1}{\omega^2 - j2\omega + 3} \\ \frac{1}{\omega^2 - j2\omega + 3} & \frac{1}{\omega^2+9} + \frac{1}{\omega^2+4} \end{vmatrix} \tag{3.6}$$

$$tr\left(U^*(j\omega) \cdot U(j\omega)\right) = \frac{1}{\omega^2+1} + \frac{1}{\omega^2+4} + \frac{1}{\omega^2+9} \tag{3.7}$$

3.1.2 The norm H_∞

Scalar case

This norm is defined in spaces of functions having a rational transform, bounded in the right half plane comprehensive of the imaginary axis, i.e. the transform is proper without pole in the right plane. The H_∞ norm is defined as the maximum absolute value of the signal transform on the $j\omega$ axis.

$$\|u\|_\infty = \sup_{\omega} |U(j\omega)| \tag{3.8}$$

With the previous properties (proper transform without poles in the right hand plane) it is demonstrated that this norm is also the maximum of the absolute value of the function over the whole right plane.

Theorem 3.1 *Maximum modulo*

If $U(s)$ is continuous and bounded in the right half plane, then the maximum of the absolute value of the function is reached on a point of the boundary, i.e. the imaginary axis

$$\sup_{s \in \mathrm{Re}(s) \geq 0} |u(s)| = \sup_{\omega} |u(j\omega)| \tag{3.9}$$

If this result is applied to the transfer function of a proper stable dynamic system the norm represent the usual maximum gain in frequency of the system.

Example 3.2 Frequency gain of a dynamic system.

Let the system have the following transfer function:

$$G(s) = \frac{1}{(s^2 + 0.2s + 1.4)(s+2)} \tag{3.10}$$

the absolute value in frequency of the transfer function is given by the next figure where the H_∞ norm is indicated

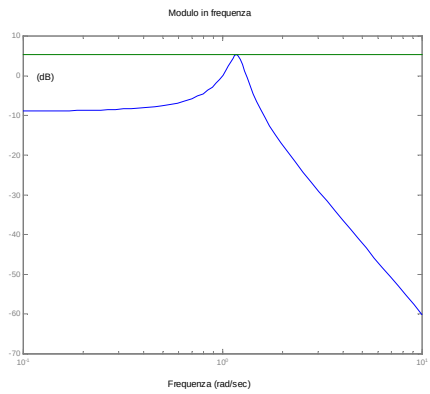

Fig. 3.11 Gain in frequency of a dynamic system

Let note that the space H_∞ contains signals with finite energy, i.e. $H_2 \subset H_\infty$.

Multivariable case

For vector or matrix functions the H_∞ norm has the following definition:

$$\|G(j\omega)\|_\infty = \sup_{\omega} \bar{\sigma}[G(j\omega)] \tag{3.11}$$

where $\overline{\sigma}(\omega)$ is the maximum *singular value* of the argument matrix for every value of ω.
Information of the singular values of a matrix are contained in the last section of this chapter. Intuitively the maximum singular value $\overline{\sigma}(\omega)$ of a transfer matrix has the same interpretation of gain in frequency of a scalar system.

3.1.3 Power and power spectra

Scalar case

Measures related to the power of a signal are used when its energy is not finite. They are not properly norms as condition 2 of (3.1) is not satisfied , for this reason they are indicated as semi-norm.
We start recalling the definition *auto-correlation function* of a signal

$$R_{uu}(t) = \lim_{T\to\infty} \frac{1}{2T} \int_{-T}^{+T} u(t+\tau)u(\tau)d\tau \tag{3.12}$$

When the Fourier transform of the auto-correlation function (3.12) exists:

$$S_{uu}(j\omega) = \frac{1}{2\pi} \int_{-\infty}^{+\infty} R_{uu}(\tau)e^{-j\omega\tau}d\tau\,, \tag{3.13}$$

this transform is called the *power spectra* of the signal.
Conversely, the auto-correlation function, when it exists, can be obtained as the inverse transform of the power spectra of the signal

$$R_{uu}(t) = \frac{1}{2\pi} \int_{-\infty}^{+\infty} S_{uu}(j\omega)e^{j\omega t}d\omega\,. \tag{3.14}$$

The power of a signal is defined as

$$\|u\|_P = \left(R_{uu}(0)\right)^{\frac{1}{2}} = \left(\frac{1}{2\pi}\int_{-\infty}^{+\infty} S_{uu}(j\omega)d\omega\right)^{\frac{1}{2}} \tag{3.15}$$

and can be computed from the root square of the integral in frequency of the power spectra.
In order to have finite power the power spectra must be a rational strictly proper function.
Alternatively, when the power is not bounded, a second measure related to the power spectra can be defined (this also is a semi-norm) as the maximum modulus in frequency of the power spectra:

$$\|u\|_S = \left(\|S_{uu}(j\omega)\|_\infty\right)^{\frac{1}{2}} = \left(\sup_\omega\left(S_{uu}(j\omega)\right)\right)^{\frac{1}{2}} \tag{3.16}$$

These measures are useful when the disturbances applied to the system are stochastic processes.

Example 3.1 White noise

The white noise is an especially useful abstraction to represent noise spanning over a large range of frequency and it used to model input and measurement noise. Its auto-correlation function is a Dirac pulse of amplitude σ^2, the noise variance. Its power spectra is constant in frequency with value σ^2. For this signal only the norm $\|u\|_S$ is defined:

$$\|u\|_S = \sigma \tag{3.17}$$

which is the signal standard deviation.

Example 3.2 The colored noise

The colored noise is the one spanning over a well defined range of frequencies. It can be described as the output of a dynamic system to an input white noise of unitary variance.

$$u = G \cdot w \tag{3.18}$$

Its power spectra is given from the square form obtained from the transform of the filter coloring the noise.

$$S_{uu}(j\omega) = G^* \cdot G\,, \tag{3.19}$$

Existence of the norms $\|u\|_P$ and $\|u\|_S$ for these signals depends exclusively from the coloring filter. In fact their values coincide with the norms H_2 e H_∞ of *G*, respectively.

Multivariable case

The multivariable case is treated similarly to the previous sections

$$\|u\|_P = tr\left(R_{uu}(0)\right)^{\frac{1}{2}} = \left(\frac{1}{2\pi}\int_{-\infty}^{+\infty} tr\left(S_{uu}(j\omega)\right)d\omega\right)^{\frac{1}{2}} \tag{3.20}$$

$$\|u\|_S = \left(\|S_{uu}(j\omega)\|_\infty\right)^{\frac{1}{2}} = \left(\sup_\omega\left(\bar{\sigma}\left[S_{uu}(j\omega)\right]\right)\right)^{\frac{1}{2}} \tag{3.21}$$

3.2 Induced norm over the dynamic operators

A dynamic system can be interpreted as an operator transforming signals from input to output spaces.
Both signals and systems enjoy two equivalent representations in the time and in the transform (frequency) domain.
In the time domain let indicate with $g(t)$ the *pulse response* of a system, the input-output relationship is given by the *convolution integral*

$$\begin{aligned} &y = g * u, \\ &y(t) = \int_0^t g(t-\tau)\cdot u(\tau)d\tau \end{aligned} \tag{3.22}$$

In a frequency representation the input-output relationship is the algebraic product of the transforms

$$Y(s) = G(s)\cdot U(s)\,. \tag{3.23}$$

If two norms have been defined for both input and output spaces an operator g is said limited if it exists, based on these two norms, a constant value M such that

$$\|y\| = \|g * u\| \le M\|u\| \quad \forall u \in U \tag{3.24}$$

Then the norm of the operator is defined as the smallest value of M that verifies the inequality. For linearity the norm can be defined also as

$$\|G\| = \sup_u \frac{\|y\|}{\|u\|} \tag{3.25}$$

This norm can be interpreted as an upper bound of the gain of the system, indicating the maximum ratio between the norms of output and input.
Obviously, only strictly stable systems have a finite norm, in the other cases a finite input can always be found which drives the output to infinite.
So, with an alternative definition of stability, we call systems that guarantee for finite inputs finite outputs *BIBO stable* (bounded input-bounded output), and for those system the norms defined for input and output induce a norm for the operator.
The next table shows which is the induced norm of the operator for different norms in input and output.

input	*output*	*oper*
H_2	H_2	$\|G(j\omega)\|_\infty$
S	S	$\|G(j\omega)\|_\infty$
P	S	$\|G(j\omega)\|_2$
P	P	$\|G(j\omega)\|_\infty$

(3.26)

From this table is evident that signals measured by their energy, power or maximum of the power spectra all induce for the operator the norm H_∞, that is the maximum abso-

lute value in frequency of the transform representation of the operator. This explains the special interest that norm H_∞ will have in our presentation.

The next sections will be devoted to the computation of the norm with a special interest in the gramians of a dynamic system, discussed next.

3.2.1 Observability and controllability gramians

To approach the computation of the H_2 and H_∞ norms it is convenient to introduce preliminarily the definitions of observability and controllability gramian of a dynamic system [4].

Let think to the free response of a dynamic system as a mapping from the Euclidean space $\Re^n$ of the vectors of initial conditions $x(0)$ to the space of the output signals in the time interval $[0,\infty)$, or, dually, to the forced response as a transformation from the input signals in the interval $(-\infty,0]$ to the Euclidean space of the final state conditions $x(0)$. We can assign to these two transformation a norm, in particular the one induced by adopting the H_2 norm for input and output spaces and the Euclidean norm for the state space. The first of the two transformations refers to the system observability pair (A,C) with the following result

$$\begin{aligned} &y(t) = Ce^{At}x_0, \\ &\|y\|_2^2 = x_0' \cdot \int_0^\infty e^{A't}C'Ce^{At}dt \cdot x_0 = x_0'Xx_0 \geq 0 \\ &\|y\|_2 \leq \overline{\rho}_X^{\frac{1}{2}} \|x_0\|_2 \end{aligned} \tag{3.27}$$

where X is a symmetric positive semi-definite matrix and $\overline{\rho}_X$ is its maximum eigenvalue (for symmetric positive definite matrices it also coincides with the maximum singular value).

The second transformation refers to the controllability pair. For duality and operating on the transpose system (A',B') can be determined in a completely analogous way the following result

$$\begin{aligned} &u'(t) = B'e^{A't}x_0', \\ &\|u'\|_2^2 = x_0'' \cdot \int_0^\infty e^{At}BB'e^{A't}dt \cdot x_0' = x_0''Yx_0' \geq 0 \\ &\|u'\|_2 \leq \overline{\rho}_Y^{\frac{1}{2}} \|x_0'\|_2 \end{aligned} \tag{3.28}$$

where x' and u' are states and output of the transpose system, Y is a symmetric positive semi-definite matrix and $\overline{\rho}_Y$ its maximum eigenvalue.

Note 3.1 Controllability gramian Y

The physical interpretation of the controllability gramian Y introduced by duality is not as immediate as the one of observability,. To evidence the interpretation let consider the forced response obtained by applying an input signal in the interval $(-\infty,0]$ reaching final conditions $x(0) = x_0$.

It is demonstrated that

$$\inf_u \|u\|_2^2 = x_0' Y^{-1} x_0 \geq 0 \tag{3.29}$$

the input signal with minimum norm able to carry the state in x_0 is linked to the inverse of the controllability gramian.

$\bar{\rho}_X$ e $\bar{\rho}_Y$ are, respectively, a norm for the two matrices *X* e *Y*, and their square roots are the norms of the transformations (3.27) e (3.28), induced by the norm $\Re^n$ for the state space and the norm H_2 for the input and output spaces.

The two matrices *X* e *Y* are called the *gramian of observability* and *controllability* of the system.

To compute the gramians the two matrix linear equations (3.30) have to be solved. They are called *Lyapunov equations*:

$$\begin{aligned} A'X + XA + C'C = 0 \\ AY + YA' + BB' = 0 \end{aligned} \tag{3.30}$$

A numerically robust algorithm for solving Lyapunov equations, adopted in the G++ environment, is proposed in Appendix 2.

The two norm are also a measure of observability and controllability of the state space.

In fact, if the system state space is weakly observable *X* is close to zero, similarly for *Y* when referring to controllability. Moreover, if a subspace of the state space becomes unobservable, e.g. at the change of some system parameters, one or more eigenvalues of *X* (related to that subspace) go to 0, and identically for the controllability subspaces.

Finally, if we are able to assign to the values of the gramian of a given system an ordering at the change of system parameters, with the following property

$$\begin{aligned} & X_1 \geq X_2 \geq X_3 \geq \cdots \\ & \text{implying} \\ & X_1 - X_2 \geq 0,\ X_2 - X_3 \geq 0, \cdots \end{aligned} \tag{3.31}$$

then the gramian itself can be assumed as a measure of observability or controllability of the system space to the changes of the parameter, as the ordering establishes a uniform dominance relationship between all eigenvalues of each pair of gramians.

3.2.2 Computing the H_2 norm

Table (3.26) shows that the H_2 norm is of little use, as induced norm of an input-output operator. Nevertheless it has a great importance because it is linked to the system gramians, it is easy to compute, and offers a first hand indication of the system gain.

Finally it is the media to evaluate guaranteed bounds of the H_∞ as will be discussed in the next section.
The fundamental result is that the H_2 norm of a dynamic system with a state space representation is given by:

$$\|G\|_2 = tr\left[CYC^T\right]^{\frac{1}{2}} = tr\left[B^T XB\right]^{\frac{1}{2}} \tag{3.32}$$

In the next section we show how gramians and H_2 norm can be used to design state feedback controls.

Minimization of the gramian norms

Let consider a dynamic system given by

$$z = G(s)\begin{bmatrix} w \\ u \end{bmatrix} = \left[\begin{array}{c|cc} A & B_1 & B \\ \hline C & 0 & D \end{array}\right] \cdot \begin{bmatrix} w \\ u \end{bmatrix} \tag{3.33}$$

where z are the objectives, w the disturbances and u the controls.
Let assume that D is full rank, and for simplicity that the condition $D'D = I$ is satisfied If these conditions are not satisfied fictitious outputs can be added to the objectives and proper transformations defined on the objective and control spaces. Let control the system with a state feedback $u = -Hx$. The resulting disturbances-objectives operator in closed loop is given by:

$$G_{eq}(s) = \left[\begin{array}{c|c} A - BH & B_1 \\ \hline C - DH & 0 \end{array}\right] \tag{3.34}$$

By changing H we can determine the control that minimizes the observability gramian of the closed loop pair

$$(A - BH, \quad C - DH) \tag{3.35}$$

in other words we want to reduce the sensitivity of the objectives with respect to the disturbances by minimizing the observability measure from the objectives of the state space driven by disturbances. This, for the (3.32), coincides also to minimize the H_2 norm of the closed loop operator (3.34) between disturbances and objectives.
The observability gramian X of (3.35) is given by

$$(A - BH)' X + X(A - BH) + (C - DH)'(C - DH) = 0 . \tag{3.36}$$

The value of H that minimizes the norm of X is given by

$$H = D'C + B'X \tag{3.37}$$

as is formalized by the next theorem.

Theorem 3.2 Minimizing the observability gramian [5]

If the pair (A, B) is stabilisable and $D'D = I$, starting from an initial value of the feedback $H, H = H_0$, that stabilizes the closed loop system, then a sequence of Lyapunov equations obtained with feedback matrices H_i given by

$$(A - BH_i)' X_i + X_i (A - BH_i) + (C - DH_i)' (C - DH_i) = 0 \tag{3.38}$$

$$H_{i+1} = D'C + B'X_i, \quad i = 0,1,2,\cdots \tag{3.39}$$

generates a monotone decreasing sequence of gramians converging to the minimum

$$X_0 \geq X_1 \geq \cdots \geq X_i \geq X \tag{3.40}$$

hence, also the sequence of maximum eigenvalues of X_i is monotonically decreasing

$$\overline{\rho}_{X_0} \geq \overline{\rho}_{X_1} \geq \cdots \geq \overline{\rho}_{X_i} \geq \overline{\rho}_X \tag{3.41}$$

Note 3.1 Special case $D'C = 0$

Note that previous result simplifies if $D'C = 0$

$$(A - BH_i)' X_i + X_i (A - BH_i) + C'C + H_i'D'DH_i = 0 \tag{3.42}$$

$$H_{i+1} = B'X_i, \quad i = 0,1,2,\cdots \tag{3.43}$$

Corollary 3.1 Minimizing the H_2 norm of the disturbance sensitivity operator

The feedback H that minimizes the observability gramian X of (3.34) minimizes also the H_2 norm of the closed loop operator.

Demonstration

The demonstration is immediate considering from the (3.32) that any feedback different from the optimal guarantees

$$B^T X B \geq B^T X_{opt} B \cdot \tag{3.44}$$

Previous results are interesting because they show that the objective of minimizing the H_2 norm of a state feedback dynamic operator is achieved by making as more weakly observable as possible the state space of the closed loop system from the objectives.

3.2.3 Computation of the H_∞ norm

For SISO systems the norm H_∞ of the input-output dynamic operator is given by the maximum absolute value in frequency of its transfer function. For MIMO systems the maximum modulus is substitute by the maximum singular value of the transfer matrix.
With a state space representation no algebraic techniques are available to explicitly determine this norm, at difference than the H_2 norm. It is possible, however, verify if the norm is lower than a predefined upper bound. In this check the system gramians play, again, an important role, how the following theorem shows.

Theorem 3.3 Upper bound of the H_∞ norm

If the H_∞ norm of a dynamic system with input w and output z

$$G(s)=\left[\begin{array}{c|c} A & B \\ \hline C & D \end{array}\right], \quad w \to z \tag{3.45}$$

is bounded by a value γ:

$$\|G(s)\|_\infty < \gamma \tag{3.46}$$

then it is verified:

$$\gamma > \bar{\sigma}(D) \tag{3.47}$$

and the observability gramian X related to the following dynamic system must exist

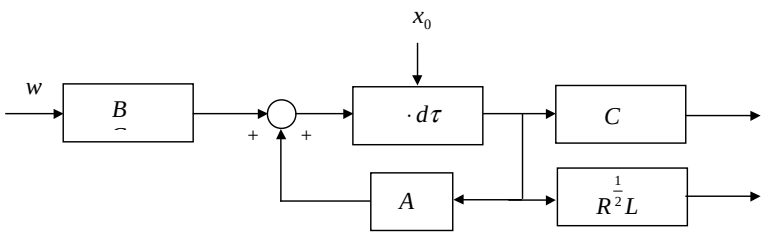

Fig. 3.12 Observability Gramian to evaluate the upper bound of the H_∞ norm

$$A'X + XA + L'RL + C'C = 0 \tag{3.48}$$

with

$$R = \gamma^2 I - D'D > 0 \quad \text{e} \quad L = R^{-1}(D'C + B'X) \tag{3.49}$$

Moreover, $A+BL$ is a stable matrix, and the gramian X reaches for the specified value of L its maximum.

Note 3.2 Special case $D=0$

Previous formulas simplify in the special case $D=0$, becoming

$$L=\gamma^{-2}B'X \tag{3.50}$$

Demonstration

A simplified demonstration of the theorem is the following:

through algebraic transformations exploiting relations (3.49), equation (3.48) can be rewritten as

$$(A+BL)'X+X(A+BL)-\gamma^2L'L+(C+DL)'(C+DL)=0 \tag{3.51}$$

It is proven, first, that $A+BL$ is the coefficient matrix of a stable system and X reaches its maximum. It is observed that the Lyapunov equation, linear in X, it can be rewritten as:

$$\begin{aligned}&(A+BL)'X_z+X_z(A+BL)+(C+DL)'(C+DL)=0\\&(A+BL)'X_w+X_w(A+BL)+\gamma^2L'L=0\\&X_z-X_w=X\geq 0\end{aligned} \tag{3.52}$$

where X_z is the gramian linked to the system output z, alone, and X_w is the one linked to the signal γw when $w=Lx$, as shown in figure 3.13.

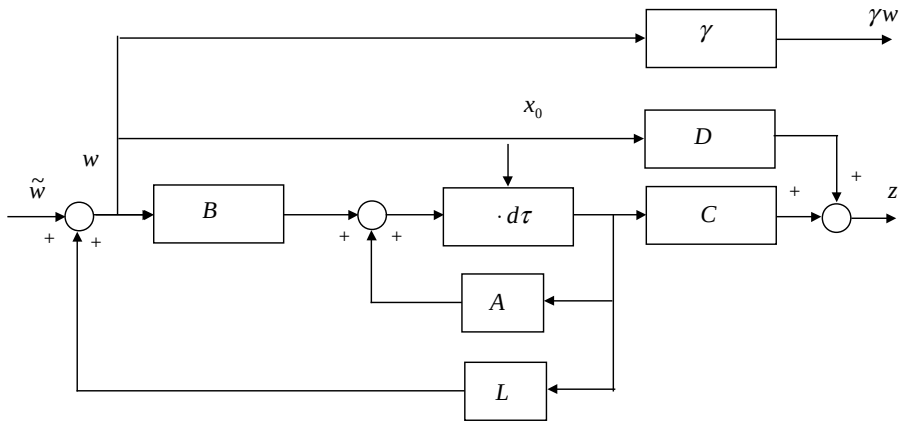

Fig. 3.13 Testing the upper bound norm - interpretation of the observability gramian

An arbitrary signal w can be expressed in the form $w = Lx + \tilde{w}$, with a proper choice of $\tilde{w}$, as shown in figure 3.13. In particular if we analyze the response of the system when $w = Lx$ ($\tilde{w} = 0$), in the presence of initial conditions x_0, and we indicate with z^* and w^* the signals in these conditions we have, for the definition of gramian and the (3.52),

$$\|z^*\|_2^2 - \gamma^2 \|w^*\|_2^2 = x_0' X x_0 \tag{3.53}$$

Moreover, because the gramian reaches the maximum with the choice $w = Lx$ also the difference $\|z^*\|_2^2 - \gamma^2 \|w^*\|_2^2$ reaches the maximum. For any other choice of w (obtained e.g. with a different value of L or perturbing the solution adding an external signal $w = \tilde{L}x + \tilde{w}$) we will have

$$\|z\|_2^2 - \gamma^2 \|w\|_2^2 \le x_0' X x_0 \tag{3.54}$$

In particular if $x_0 \to 0$, previous result demonstrates the theorem

$$\|z\|_2^2 \le \gamma^2 \|w\|_2^2 . \tag{3.55}$$

The formalization that L given by (3.49) or (3.50) maximizes the observability gramian (3.48) is given by the following theorem.

Theorem 3.4 Maximum of the observability gramian

if $\|G(s)\|_\infty < \gamma$ then the sequence of L given by

$$A'X_i + X_i A + L_i' R L_i + C'C = 0 \tag{3.56}$$

$$L_{i+1} = R^{-1}\left(D'C + B'X_i\right); \quad i = 0, 1, 2, \cdots; \quad L_0 = 0 \tag{3.57}$$

generates a monotone increasing sequence of gramians converging to a maximum

$$X_0 \le X_1 \le \cdots \le X_i \le X \tag{3.58}$$

To find a bound close to the actual norm of the operator is sufficient to repeat the procedure suggested by the theorem for decreasing values of γ, until the sequence stop to converge. In fact, if the value of γ is below to the operator norm, doesn't exist any solution to (3.48), (3.49), (3.51) preventing the convergence of the sequence.

Note 3.3 Worst input signal

We have stated that the input $w^* = Lx$ bring the difference $\left\|z^*\right\|_2^2 - \gamma^2 \left\|w^*\right\|_2^2 = x_0' X x_0$ to its maximum with respect to any other choice of w. For this reason, $w = Lx$ is commonly indicated as the worst input. In reality this is not exactly the signal which brings the output H_2 norm to equate the product between the operator H_∞ norm and the input H_2 norm, as in the definition (3.25). In fact, in the case of figure 3.13 we don't have a pure input output relationship, but an initial condition x_0 is also present. Only when γ tends to the norm value ($\gamma \to \|G(s)\|_\infty$) the interpretation of worst signal for $w = Lx$ assumes fully its meaning, as only in that case the term $x_0' X x_0$ becomes negligible for any finite initial condition with respect to the norms $\left\|z^*\right\|_2^2$ and $\left\|w^*\right\|_2^2$.

3.2.4 Gramians and stochastic processes

The controllability gramian has an interesting interpretation linked to the power spectra of a colored stochastic process. In fact, the covariance matrix of the samples of the state of the signal (3.18) in steady state is given by the controllability gramian Y, the covariance matrix of an output samples CYC^T, as a consequence the norm $\|u\|_P$ of the signal is coincident with the norm H_2 of the coloring filter.

3.3 Duality

Coping with state variable representations of dynamic systems we will frequently encounter an aspect of the dynamics of linear invariant systems called *duality*. This property was already evidenced by the pairs of matrices of observability and controllability of a system that by transposition have similar characteristics. The property is synthesized by the following definition.

The *dual* or *transpose* operator of a given dynamic system is the one obtained transposing the quadruple of matrix of its representation

$$\left[\begin{array}{c|c} A & B \\ \hline C & D \end{array}\right] \rightarrow \left[\begin{array}{c|c} A' & C' \\ \hline B' & D' \end{array}\right] \tag{3.59}$$

In the dual model outputs and inputs interchange the respective roles, as well as the observability and controllability gramians. It is immediate to verify that the norms H_2 e H_∞ are preserved by duality.

Because of this property it is unimportant to approach the problem of designing the control adopting either one or the other of the two representations, obviously, transposing the control filter, before its use, if the dual model of the process has been adopted for the design.

3.4 Sample data systems

3.4.1 Gramians and H_2 norm

In sampled data systems formulas (3.2) giving the energy of a signals is substituted by

$$\|y\|_2^2 = \sum_{o}^{\infty} y'(k)y(k)\Delta \tag{3.60}$$

while, the free response of a system is given by

$$y(k) = CA^k x_0 \tag{3.61}$$

The relationship between output energy and observability gramian is now

$$\|y\|_2^2 = x_0' \sum_{o}^{\infty} A'^k C'CA^k x_0'\Delta = x_0' X x_0'\Delta \tag{3.62}$$

with observability gramian given by

$$X = A'XA + C'C \tag{3.63}$$

This is the discrete time Lyapunov equation.

The corresponding controllability gramian acquires a very interesting interpretation when dealing with discrete time stochastic processes, analogously to the continuos case.

Let assume that the input of a dynamic system is represented by an independent sequence of random samples with unity variance. Let define the covariance of the state at step k

$$Y(k) = E\left(x(k)x(k)'\right) \tag{3.64}$$

that, expressed as function of the input samples originates the following difference equation

$$Y(k+1) = AY(k)A' + BB' \tag{3.65}$$

At steady state we obtain the algebraic Lyapunov equation of the controllability gramian

$$Y = AYA' + BB' \tag{3.66}$$

dual of the observability gramian seen before.
As a conclusion Y is the stationary covariance matrix of the state of an asymptotically stable system driven by an input white noise of unitary variance.

3.4.2 Relationship between continuous and discrete time systems

If we want to apply previous results obtained when sampling a continuous time system, and compare simulation results with the theoretical ones represented by the output to a white noise the following consideration are needed.
Let be continuous and discrete time systems given by

$$\begin{aligned} &\dot{x}(t) = Ax(t) + Bw(t), \quad y(t) = Cx(t) \\ &x(k+1) = \overline{A}x(k) + \overline{B}\overline{w}(k), \quad y(k) = Cx(k) \end{aligned} \tag{3.67}$$

obtained using the techniques described in the previous chapter.
In order to have in the discrete case results comparable to the continuous one it is necessary that between the intensity of the samples of the input white noise there is a rate of Δ, therefore, assuming the variance of $w(t)$ one, the variance of the samples in the discrete case becomes

$$E\left(\overline{w}'(k)\overline{w}(k)\right) = \frac{1}{\Delta^2} \tag{3.68}$$

The integral of the output signal built from the sum of samples, we have already seen, introduces a factor of Δ. In conclusion the following approximation is verified

$$\|y\|_P = \sqrt{tr\left(CYC'\right)} \cong \frac{1}{\sqrt{\Delta}}\sqrt{tr\left(C\overline{Y}C'\right)} \tag{3.69}$$

3.4.3 The H_∞ norm

If the discrete time transfer function of the system is available, remembering the relationship between pulse transform and Z transform:

$$\hat{G}'(s) = G(z)\big|_{z=e^{\Delta \cdot s}} .$$

The H_∞ norm is the maximum on the unit circle of the maximum singular value of the discrete time transfer function

$$\left\|\hat{G}'(s)\right\|_\infty = \sup_{\omega} \overline{\sigma}\left(\hat{G}'(j\omega)\right) = \sup_{z=e^{j\theta}} \overline{\sigma}\left(G(z)\right).$$

The H_∞ norm can also be characterized using an algebraic approach analogous to theorem 3.3, however the notation is a little more involved. So results are simply reported in the chapter devoted to the synthesis.

3.5 Matrix singular values

The singular values of a matrix A, indicated as $\sigma_i(A)$, are the root square of the eigenvalues of the square form $A'A$ or AA'. Hence A e A' have identical singular values different from zero. Singular values equal zero may differ in number only when the matrix A is not square. In particular, the maximum singular value, indicated with $\overline{\sigma}(A)=\overline{\sigma}(A')$, is related to the maximum modulus of the vector

$$y = Ax, \quad \|y\|_2^2 = x'A'Ax, \quad \overline{\sigma}(A) = \max_{x|x|=1}\|y\|_2 = \max_x \frac{\|y\|_2}{\|x\|_2} \tag{3.70}$$

representing the induces norm of the matrices A e A', adopting . R^2 spaces for inputs and outputs vectors.
Analogously the minimum singular value of a matrix A

$$\underline{\sigma}(A) = \min_{|x|=1}\|y\|_2 \tag{3.71}$$

The rate between maximum and minimum singular values is called *conditioning index of the matrix* .
An useful inequality is the following:

$$\underline{\sigma}(A)-\overline{\sigma}(B) \le \underline{\sigma}(A+B) \le \underline{\sigma}(A)+\overline{\sigma}(B) \tag{3.72}$$

If A is square and invertible

$$\overline{\sigma}(A^{-1}) = \frac{1}{\underline{\sigma}(A)}, \underline{\sigma}(A^{-1}) = \frac{1}{\overline{\sigma}(A)} \tag{3.73}$$

Beyond the properties (3.1) of a norm, the maximum singular value of a matrix has the property

$$\overline{\sigma}(A\cdot B) \le \overline{\sigma}(A)\cdot\overline{\sigma}(B). \tag{3.74}$$

For square, symmetric, definite or semi-definite matrices eigenvalues and singular values are coincident. More generally singular values must not be confuse with eigenvalues. A relationship between the two is given by the following inequalities:

$$\underline{\sigma}(A) \le |\lambda_i(A)| \le \overline{\sigma}(A). \tag{3.75}$$

One last result relates singular values and trace of the square form of a square matrix

$$\sigma_i^2(A) = tr[A'A] = \sum_{i,j} |a_{ij}|^2 \cdot \tag{3.76}$$

The trace of a matrix is the sum of all its diagonal elements. In the case of the trace of the square form it means the sum of the square of all elements of the matrix.

3.5.1 Structured matrices

When a matrix is structured in two blocks the following inequality is verified:

$$\max\{\overline{\sigma}(A), \overline{\sigma}(B)\} \le \overline{\sigma}\left(\begin{bmatrix} A \\ B \end{bmatrix}\right) \le \sqrt{2}\,\max\{\overline{\sigma}(A), \overline{\sigma}(B)\} \tag{3.77}$$

but also

$$\overline{\sigma}^2\left(\begin{bmatrix} A \\ B \end{bmatrix}\right) \le \overline{\sigma}^2(A) + \overline{\sigma}^2(B)\cdot \tag{3.78}$$

In the case of the matrix is structured in four block is verified

$$\overline{\sigma}\left(\begin{bmatrix} A_{11} & A_{12} \\ A_{21} & A_{22} \end{bmatrix}\right) \le \overline{\sigma}\left(\begin{bmatrix} \overline{\sigma}(A_{11}) & \overline{\sigma}(A_{12}) \\ \overline{\sigma}(A_{21}) & \overline{\sigma}(A_{22}) \end{bmatrix}\right). \tag{3.79}$$

Obviously, any restriction of a given matrix has maximum singular value smaller or equal to the maximum singular value of the entire matrix, e.g.

$$\overline{\sigma}(A_{ij}) \le \overline{\sigma}\left(\begin{bmatrix} A_{11} & A_{12} \\ A_{21} & A_{22} \end{bmatrix}\right). \tag{3.80}$$

3.6 Problems

3.1 Given a dynamic filter

$$\left[\begin{array}{cc|cc} 0 & 1 & 0.1 & 0 \\ -1.9 & -7.3 & 0 & 1 \\ \hline -0.9 & -7 & & \\ 0 & 1 & & \end{array}\right]. \tag{3.81}$$

verify the values of its norms H_2 and H_∞. Hence, apply a unitary white noise and explain why the norm P of the output cannot be bounded by the norm H_∞ of the operator, considering that the input is a white noise with unitary variance.
Answer: observe the table (3.26), and note that for a white noise input the norm P is not defined. Viceversa, the S of the output is exactly the H_∞ norm of the operator.

3.7 Bibliography

[1] Chen, C. T. 1984, *Linear System Theory and Design*. Holt, Rinehart and Winston.
[2] Desoer, C. A. and M. Vidyasagar 1975, *Feedback System: Input-Output Properties.* Academic Press, New York.
[3] J. C. Doyle, B. A. Francis, A. R. Tannenbaum, "Feedback Control Theory", Macmillan Publishing Company New York 1992.
[4] Antsaklis, P. J. and Michel, A.N., 1997, *Linear Systems*. McGraw-Hill.
[5] Kleinman, D. L. 1968. *"An iterative technique for Riccati equation computation"* IEEE Trans. on Automatic Control , Vol 13, pp. 114-115