Chapter 4

THE CONTROL LOOP

This chapter presents linear dynamic systems in their principal closed loop control structures: cascade compensators, state feedback, feedback from the estimated state.
The objective is to introduce the notation, to take confidence with the double representation of a system in the time and in the frequency domain and present the principal relationships establishing between signals in a closed loop. Continuous and discrete systems are treated contemporaneously, as they don't present major differences.
Implementing a closed loop control means measuring one or more variables in the output of the system, return these measures in input, combining them with reference signals or direct measures of disturbances (when available), process these data using a dynamic filter and generate an input signal to control the system.
We propose in the following three different control structures:
The first one is the classical cascade compensation analyzed in the frequency domain, used mostly for "*single input single output* " (SISO) systems.
The second is the algebraic state feedback, when all states are available, and the control is a linear combination of the states. This control is rarely directly applicable, however, it represents the building block we will refer to design controls.
The third schema is the control from output measurements based on state observer and estimated states feedback. This scheme is represented in the time domain, and approaches generally "*multi input-multi output*" (MIMO) systems.
A control loop with a cascade compensator, analyzed in the frequency domain is found in all classical books of automatic control, e.g. [1]. State feedback, and feedback from state observers are arguments of any modern book of system theory, e.g. [2].
State feedback and observer based feedback in relation with extended systems are discussed in the introductory chapters of modern texts of robust control theory [3].
A linear dynamic system is described with the usual state variable representation where controls u and disturbances w are distinguished in inputs and objectives z and measures y in output:

$$\begin{aligned} \dot{x}(t) &= Ax(t) + B_1 w(t) + B_2 u(t) \\ z(t) &= C_1 x(t) + D_{11} w(t) + D_{12} u(t) \\ y(t) &= C_2 x(t) + D_{21} w(t) \end{aligned} \tag{4.1}$$

or simply

$$\begin{aligned} \dot{x}(t) &= Ax(t) + B_1 w(t) + B_2 u(t) \\ y(t) &= Cx(t) + D_1 w(t) + D_2 u(t) \end{aligned} \tag{4.2}$$

A, B_1, B_2, C, D_1, D_2 are matrices of proper dimensions, x is the state vector, u is the control vector, w are the disturbances or in general signals external to the system such as references, z are outputs of the system associated to objectives of performance and y are the measures taken on the system variables. Physical plants are always strictly proper, so the matrix D_{22} is always zero, D_{12} accounts for the direct presence of inputs among the objectives and D_{21} for the presence of noise on the measurements. At the beginning, for simplicity, also the matrix D_{11} will be considered zero. However, in practical problems this matrix is frequently present, so it cannot be ignored and it will be accounted for later in our approach.
We assume that the state representation is minimal: only strictly observable and controllable components of the state space are present in the model. When the disturbances are not considered and we explicitly refer to the control u pedices 1,2 in the matrices are omitted.
In discrete time, analogously, the representation is given by the following system of difference equations:

$$\begin{aligned} x(k+1) &= \overline{A}x(k) + \overline{B}_1 w(k) + \overline{B}_2 u(k) \\ y(k) &= Cx(k) + D_1 w(k) + D_2 u(k) \end{aligned} \tag{4.3}$$

vectors represent samples of the corresponding signals.
We will start with SISO systems. This is done exclusively to make visible in simple form some fundamental results. However, the general treatment of the book will approach the multivariable case.
Continuous and discrete case are formally identical with the substitution to differential equations difference equation in the time domain, and of the operator s with z in the realm of the transforms.

4.1 Representation in the transform domain

4.1.1 Continuous time

Transfer function (t.f.) is a symbolic representation of the input-output relationship in a dynamic system. In the finite dimensional case they have a rational structure.
This representation is obtained performing the Laplace transform of the state variable representation (4.1) as follows:

$$\begin{aligned} sx(s) &= Ax(s) + B_1 w(s) + B_2 u(s) \\ x(s) &= (sI - A)^{-1}\begin{bmatrix} B_1 & B_2 \end{bmatrix} \cdot \begin{vmatrix} w(s) \\ u(s) \end{vmatrix} \end{aligned}$$

We remember that

$$(sI - A)^{-1} = \frac{1}{\det(sI - A)} adj(sI - A) \ . \tag{4.4}$$

where *adj*() is the adjoint of a matrix and *det*() is the determinant.
The adjoint is a matrix which elements are polynomial of order at most *n*-1, if *n* is the order of the dynamics of the system. The determinant is a polynomial of order *n*. It is called also the characteristic polynomial of the dynamics of the system.
Input-output relationships are defined as

$$y(s) = \frac{1}{d(s)} \begin{pmatrix} n(s) & k(s) \end{pmatrix} \cdot \begin{vmatrix} w(s) \\ u(s) \end{vmatrix}$$

where $d(s) = \det(sI - A)$ is the *characteristic polynomial* of the system and

$$\begin{aligned} n(s) &= C_1 \cdot adj(sI - A) \cdot B_1 + D_1 \cdot d(s), \\ k(s) &= C \cdot adj(sI - A) \cdot B_2 + D_2 \cdot d(s) \end{aligned} \tag{4.5}$$

are polynomial matrices of proper dimension.
Each t.f. between pairs of input and output will have the following form:

$$G(s) = \frac{b_m s^m + b_{m-1} s^{m-1} + \cdots + b_0}{s^n + a_{n-1} s^{n-1} + \cdots + a_0}, \quad n > m \tag{4.6}$$

where the roots of the denominator are the eigenvalues of the coefficient matrix *A*.
We will indicate it also as

$$G(s) = \frac{n(s)}{d(s)} \tag{4.7}$$

4.1.2 Discrete time

Analogously for discrete time systems the Z transform performed on the state representation (4.3) carries to

$$\begin{aligned} zx(z) &= \overline{A}x(z) + \overline{B}u(z) \\ x(z) &= [zI - \overline{A}]^{-1} \overline{B}u(z) \\ x(z) &= \frac{1}{\det(zI - \overline{A})} adj(zI - \overline{A}) \overline{B}u(z) \\ y(z) &= \frac{1}{\det(zI - \overline{A})} C \cdot adj(zI - \overline{A}) \overline{B}u(z) \end{aligned}$$

The t.f. of the model assumes the form:

$$\overline{G}(z) = \frac{\overline{b}_{\overline{m}} z^{\overline{m}} + \overline{b}_{\overline{m}-1} z^{m-1} + \cdots + \overline{b}_0}{z^n + \overline{a}_{n-1} z^{n-1} + \cdots + \overline{a}_0}, \quad \overline{m} = n - 1 \cdot$$

Let note that the denominators of the two transfer functions (continuous and discrete) representing the same system have the same order, and for the discrete time system, using a Z.O.H. reconstructor for the input, the degree of the polynomial at numerator is always the degree of the denominator minus one.
This obviously is not true for models obtained with first order approximation of the derivative, where both models share the same orders at numerators and denominators and have zeroes and poles linked by the transformation $\overline{\lambda} = e^{\lambda\Delta}$.

4.1.3 Zeroes, poles and gains

Polynomials of a t.f. can be factorized where z_i, indicated as *zeroes*, are the roots of the numerator and λ_i, *poles*, are the roots of the denominator. *r* is the number of eventual poles in zero, $k_{0,1,2}$ indicates the *gain* of the t.f. in case of *0, 1, 2* poles in zero. The denominator is always in *monic* form (the coefficient of the highest power of *s* is one.

Continuos time

$$G(s) = \frac{n(s)}{d(s)} = \frac{b_m \cdot s^m + \cdots + b_1 \cdot s + b_0}{s^n + \cdots + a_1 \cdot s + a_0} = \frac{k^* \cdot \prod_{i=1}^{m} (s - z_i)}{s^r \cdot \prod_{i=1}^{n-r} (s - \lambda_i)}$$

in case of pair of complex conjugate roots second order factors are preferred with the following notation:

$$(s - \sigma + j \cdot \omega) \cdot (s - \sigma - j \cdot \omega) = (s^2 + 2 \cdot \zeta \cdot \omega_n \cdot s + \omega_n^2)$$

where (σ, ω) are the real and imaginary parts of the roots and (ζ, ω_n) are called damping and un-damped pulsation.
Referring to gain, we distinguish according to the number *r* of poles in zero:

$k_r = \dfrac{k^* \cdot \prod -z_i}{\prod -\lambda_i}$, $\lambda_i \neq 0$ is the gain, and specifically;

$k_0 \equiv k_{st}$, *steady state gain*;

$k_1 \equiv k_v$, *speed gain*;

$k_2 \equiv k_a$, *acceleration gain*.

Interpretation of gain, for asymptotically stable systems, is the following:

- k_{st} is the factor of amplification between output and input for a step input;
- k_v is the rate of the ramp in output for a unitary input step;
- k_a is the acceleration of the output for a unitary input step.

Discrete time

$$\overline{G}(z)=\frac{\overline{N}(z)}{\overline{D}(z)}=\frac{\overline{b}_{\overline{m}}\cdot z^{\overline{m}}+\cdots+\overline{b}_1\cdot z+\overline{b}_0}{z^n+\cdots+\overline{a}_1\cdot z+\overline{a}_0}=\frac{\overline{k}^*\cdot\prod_{i=1}^{\overline{m}}(z-\overline{z}_i)}{(z-1)^r\cdot\prod_{i=1}^{n-r}(z-\overline{\lambda}_i)}$$

$(z-r+j\cdot i)\cdot(z-r-j\cdot i)=z^2-2\cdot r\cdot z+r^2+i^2$

$\overline{k}_r=\dfrac{\overline{k}^*\cdot\prod(1-\overline{z}_i)}{\prod(1-\overline{\lambda}_i)}$, gains

$\overline{k}_0\equiv k_{st}$, is the *steady state gain*;

$\overline{k}_1\equiv k_v\cdot\Delta$, *speed gain*;

$\overline{k}_2\equiv k_a\cdot\Delta^2$, *acceleration gain*.

4.1.4 Multivariable systems

In the multivariable case the input-output operator is represented by *transfer function matrices* i.e. matrices whose elements are rational functions (t.f.m.) An immediate, special form is the following has already been derived in (4.4)

$$G(s)=\frac{1}{d'(s)}n'(s)\,, \tag{4.8}$$

where $d'(s)$ is the characteristic polynomial and $n'(s)$ is a polynomial matrix of dimension $p\times q$, the number of outputs and inputs. The zeroes (called transmission zeros, are less evident and more difficult to compute than in the SISO case.
Moreover, at difference than in the SISO case, the most general minimum order representation given in the form of rate of polynomial matrices is not unique. There are two distinct families of left and right factorization of the t. f. m.

$$G(s)=\tilde{d}(s)^{-1}\tilde{n}(s) \tag{4.9}$$

$$G(s)=n(s)\cdot d(s)^{-1} \tag{4.10}$$

where $\tilde{d}(s),\tilde{n}(s)$ and $n(s),d(s)$ matrices of polynomials of proper dimensions.
These representations, however, becomes very involved losing the clearness and simplicity at the basis of the success of the frequency approach for SISO systems. A detailed treatment of this topic is delayed to a next chapter, but it will not pursued for practical application by this book.

4.2 Canonical forms

State variable representations can be linked directly to t.f. exploiting special state space representations called *canonical forms*. These forms are useful for analysis, but their numerical weakness prevented any practical use. However, two examples, useful for building simple SISO models directly from their t.f. and to obtain a first understanding of state feedback and state observer are presented in the next two sections.

4.2.1 Canonical form of control

The canonical form of control is characterized from the following state representation

$$\begin{bmatrix} \dot{x}_1 \\ \dot{x}_2 \\ \cdot \\ \dot{x}_n \end{bmatrix} = \begin{vmatrix} 0 & 1 & 0 & 0 \\ 0 & & 1 & \\ 0 & & & 1 \\ -a_0 & -a_1 & \cdot & a_{n-1} \end{vmatrix} \cdot \begin{bmatrix} x_1 \\ x_2 \\ \cdot \\ x_n \end{bmatrix} + \begin{bmatrix} 0 \\ 0 \\ \cdot \\ 1 \end{bmatrix} \cdot u(t)$$

$$y(t) = \begin{bmatrix} b_0 & \cdot & b_m & 0 \end{bmatrix} \cdot \begin{bmatrix} x_1 \\ x_2 \\ \cdot \\ x_n \end{bmatrix}$$

where the coefficients a_i, b_i are the same of the polynomial of the system t.f. (4.6). This form can be represented by the following block diagram:

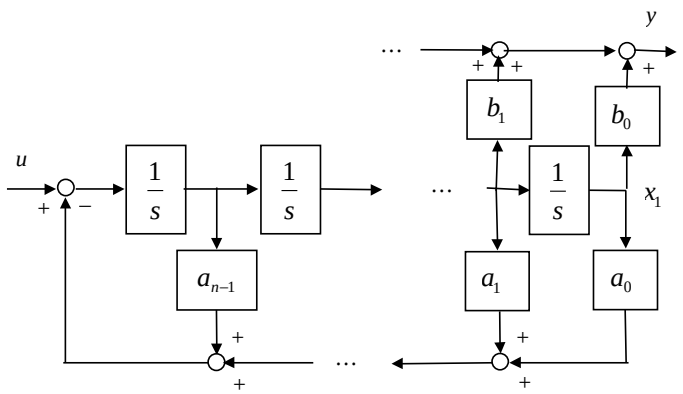

Fig. 4.1 Canonical form of control

Algebraic transformations of the previous diagram, obtained transferring the starting points of all feedback to the unique first state x_1, allow to recover the t.f. of the system:

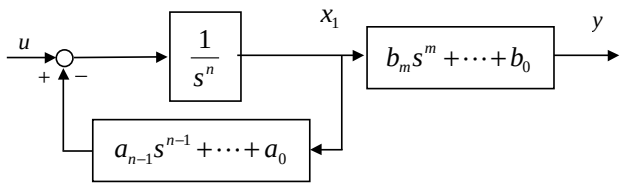

Fig. 4.2 T.f. of the system resulting form the canonical form of control

Indicate $x_1 = \xi$, ξ is called *partial state* of the system when through successive derivatives of ξ all system state components can be recovered. Let rewrite the diagram of figure 4.2 as follows

$$d(s)\cdot\xi(s) = u(s),\ y(s) = n(s)\cdot\xi(s)$$

from whom the t.f. of system (4.7) can be recovered.

4.2.2 Canonical form of observer

This form is dual of the previous one. State representation is given by:

$$\begin{bmatrix} \dot{x}_1 \\ \dot{x}_2 \\ \cdot \\ \dot{x}_n \end{bmatrix} = \begin{vmatrix} -a_{n-1} & 1 & 0 & 0 \\ -a_{n-2} & & 1 & 0 \\ \vdots & & & 1 \\ -a_0 & 0 & 0 & 0 \end{vmatrix} \cdot \begin{bmatrix} x_1 \\ x_2 \\ \cdot \\ x_n \end{bmatrix} + \begin{bmatrix} 0 \\ b_m \\ \vdots \\ b_0 \end{bmatrix} \cdot u(t)$$

$$y(t) = \begin{vmatrix} 1 & 0 & 0 & 0 \end{vmatrix} \cdot \begin{bmatrix} x_1 \\ x_2 \\ \cdot \\ x_n \end{bmatrix}$$

expressed by the following block diagram:

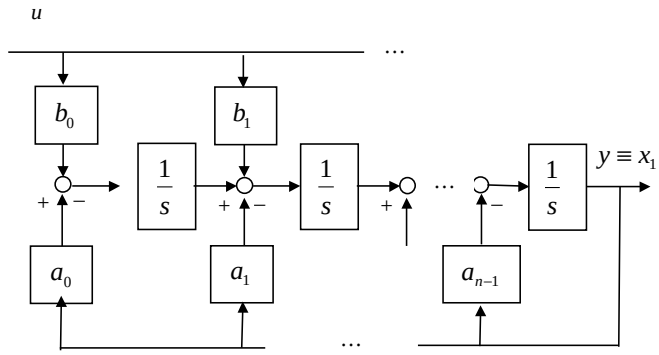

Fig. 4.3 Canonical form of observer

Algebraic transformations obtained transferring all summation nodes to the state x_n carry to the following form:

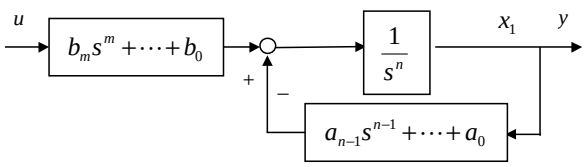

Fig. 4.4 Transfer function of a system resulting from the canonical form of observer

After solution the t.f. (4.7) of the system is recovered.

4.2.3 Duality

A precise relationship exists between the previous two forms. We note, in fact, that one of the two state representations is the transpose or dual of the other one , as defined in section 3.3 of the chapter 3. It is interesting from the previous figure to note that duality can be evidenced from block diagrams, as well. The rules for transforming a block diagram in its dual are the following:

- arrows representing signal flows have to be inverted in the links (input become outputs and viceversa;
- sum nodes are substituted by derivation points.

4.3 Output control with cascade dynamical filters

4.3.1 SISO systems – one degree of freedom

To show the fundamental properties of a closed control loop we consider a SISO system described by its t.f. closing the loop with a cascade filter.
The most simple control structure is the one of figure 4.5, indicated in the classical literature as *one degree of freedom control* with cascade compensator. We observe that the feedback arc is unitary and the control is computed directly from the signal difference between the reference and the feedback signal $e = r - y_r$. The compensator is needed to modify the dynamical characteristics of the loop gain in order to achieve desirable characteristics to the controlled system, e.g. stability. From this derives the name compensator for the filter.

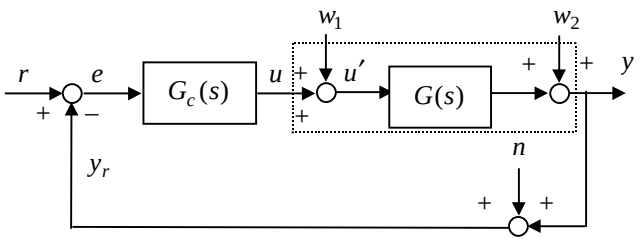

Fig. 4.5 Closed loop control – unitary feedback

In figure 4.5 $G(s)$ represents the process, $G_c(s)$ is a dynamic filter, w_1 and w_2 are process disturbances localized on input and output of the system, *r* is the reference that the output must follow, the control is called tracking if *r* is different from zero otherwise regulation, *e* is the tracking error signal, *n* is the output measurement noise, y_r is called the feedback signal.
The definition of one degree of freedom derives from the unique filter $G_c(s)$ available for designing the control.
Different closed loop t.fs. can be evaluated between signals in different positions of the loop. For simplicity we will consider as external signals only *r* and w_1, and as outputs *u* and *y*:

$$\begin{vmatrix} u \\ y \end{vmatrix} = \frac{1}{1+GG_c} \begin{bmatrix} G_c & -GG_c \\ GG_c & G \end{bmatrix} \cdot \begin{vmatrix} r \\ w_1 \end{vmatrix}, \tag{4.11}$$

or with the same input signals as output we assume e, u':

$$\begin{vmatrix} e \\ u' \end{vmatrix} = \frac{1}{1+GG_c}\begin{bmatrix} 1 & -G \\ G_c & 1 \end{bmatrix} \cdot \begin{vmatrix} r \\ w_1 \end{vmatrix}, \tag{4.12}$$

Any other relationship can be derived from the previous ones.

In (4.11) and (4.12) are present the fundamental relationships needed to understand a closed loop control. These will be relevant for the analysis and for requirement specifications, and have the following names:

- $G_a = GG_c$ *loop function* or *loop gain*;
- $G_r = 1 + G_a = 1 + GG_c$ *loop return function*;
- $S = \dfrac{1}{1+G_a} = \dfrac{1}{1+GG_c}$ *sensitivity function*;
- $T = G_{eq1} = \dfrac{G_a}{1+G_a} = \dfrac{GG_c}{1+GG_c}$ *complementary sensitivity function* or *equivalent closed loop function with unitary feedback*;
- $V = G_{equ} = \dfrac{G_c}{1+G_a} = \dfrac{G_c}{1+GG_c}$ *closed loop control activity function*
- $R = G_{eqd} = \dfrac{G}{1+G_a} = \dfrac{G}{1+GG_c}$ *closed loop input disturbances – output function*.

The loop return function plays an especially important role, in fact, its numerator polynomial is the *characteristic polynomial of the closed loop dynamics*, so its zeroes define the dynamics of the controlled system common to all t.f.s in the loop
As stability will be the first concern in designing a closed loop system as 4.5, it is convenient to make a few preliminary comments related to stability in relation with free response and forced response.

- Classical approaches have always privileged free response in stating stability, referring to asymptotic stability as the property for which the free response from any initial condition goes to zero as the time goes to infinite.
- Modern approach gives more emphasis to the forced response, stating for stability the property from which a limited input signal receives as response another limited output signal, according to given norms: It is called also (BIBO "bounded input-bounded output") stability.

The first definition is simple: it requires that all roots of the closed loop characteristic function (the numerator of the loop return function $1+GG_c$) are strictly inside the left half plane.
The second definition refers to specific input-output pairs. If only reference and output signals are considered then this stability definition called also *external stability* and doesn't coincide with the first one. It is less restrictive guaranteeing stability to the only mode of the closed loop controllable from the reference and observable from the output. This could hide other unstable modes in the closed loop.

In order that the two definitions of stability, on the free response and on the forced response coincide, is necessary introduce on the input-output relationships a stronger condition: i.e. that all t.f. from all external inputs and all outputs possibly present on the loop be stable. This second definition is called *internal stability*.

Definition 4.1 Internal stability of a closed loop system

Controlled system of figure 4.5 is internally stable if any t.f. present in (4.11) is stable.

Example 4.1 Closed loop system externally but not internally stable

Let be the process $G(s)=\dfrac{1}{(s-1)(s+1)}$ and the compensator $G_c(s)=\dfrac{4(s-1)}{(s+5)}$.

The loop return function is in this case

$$1+G(s)G_c(s)=1+\frac{4}{(s+1)(s+5)}=\frac{s^2+6s+9}{(s+1)(s+5)}=\frac{(s+3)(s+3)}{(s+1)(s+5)}.$$

The t.f. of the closed loop are:

$$\begin{vmatrix} u \\ y \end{vmatrix}=\frac{(s+1)(s+5)}{(s+3)(s+3)}\begin{bmatrix} \dfrac{4(s-1)}{(s+5)} & -\dfrac{4}{(s+5)(s+1)} \\ \dfrac{4}{(s+5)(s+1)} & \dfrac{1}{(s-1)(s+1)} \end{bmatrix}\cdot\begin{vmatrix} r \\ w \end{vmatrix}. \tag{4.13}$$

Clearly one of the closed loop functions is unstable.
We note that the condition of external and internal stability are coincident when no perfect cancellations between zeroes in the compensator and pole in the process occur in the right half plane.

Note 4.1 Perfect cancellations zero-polo in the right half plane

Previous example shows a relevant aspect in the design of the control: no perfect cancellations between zeroes and poles of compensator and process in the right half plane are allowed. This aspect can be seen from two points of view. In practical terms perfect cancellations are not possible, so an unstable pole will be always present in the closed loop, not moved by the feedback because of the presence of a close zero. Algebraically perfect cancellation prevents internal stability.

The problem was irrelevant with classical loop design, becomes important with the introduction of modern synthesis techniques, where the filter is generated and the results (in particular the stability) are evaluated automatically by an algorithm.

We show, very preliminarily, how to design a compensator guaranteeing internal stability System and filter are described by two t.f. the first strictly proper and the second simply proper

$$G(s)=\frac{n(s)}{d(s)},\quad G_c(s)=\frac{n_c(s)}{d_c(s)}. \tag{4.14}$$

Stability is evaluated from the zeros of the loop return function

$$1+G_a(s)=\frac{d(s)d_c(s)+n(s)n_c(s)}{d(s)d_c(s)}. \tag{4.15}$$

Let choose the close loop characteristic polynomial $d_{cc}(s)$ with roots strictly in the left half plane and solve the following equation with unknown the filter parameters

$$d(s)\cdot d_c(s)+n(s)\cdot n_c(s)=d_{cc}(s) \tag{4.16}$$

This equation is called *diophantine equation* and is solved through a system of linear equations in the filter parameters. Conditions on the filter dimensions and details for its solution are contained in the last section of this chapter.
It is easy to verify that the solution will always guarantee the internal stability property, in fact, if there are roots in the right half plane common to denominator of the system and numerator of the compensator, or viceversa, the same factor would be present in the left hand side of the equation, but this contradict the assumption of $d_{cc}(s)$ to not have roots on the right half plane.

Example 4.2 Solution of the diophantine equation

We consider a discrete time system with transfer function $G(z)=\dfrac{z-1.5}{(z-1)(z-2)}$.

This system has one zero and one pole outside the unit circle and one pole in one, hence, it is unstable. We want to design a control with three closed loop poles in position 0.5. The compensator (with the lowest possible order that stabilizes the system) is of the first order.

$$(z-1.5)(az+b)+(z-1)(z-2)(z-c)=(z-0.5)^3 \tag{4.17}$$

Solved the equation the desired filter is

$$G_c(z)=\frac{7z-7.25}{z-5.5} \tag{4.18}$$

We note that the filter is by itself unstable, an interesting question is: does a stable filter exist for this system that stabilizes the closed loop?
Here the answer is no, this is always the case when the system satisfies an interesting property of interlacing between zeros and poles in the right half plane. To know more see reference [4].

4.3.2 Sensitivity to disturbance and plant uncertainties

We discuss now the properties of the principal t.f. of the closed loop.
The equivalent closed loop reference-output with unitary feedback has zeroes identical to the zeroes of the loop function

$$T = G_{eq1}(s) = \frac{n(s)n_c(s)}{d_{cc}(s)}. \tag{4.19}$$

If the steady state loop gain is high the value of the function (4.19) per s=0 (low frequencies) is close to one, and for $s \to \infty$, when the process is strictly proper (this is always the case), goes to zero as $G_a(s)$, as is seen in (4.20)

$$G_{eq1}(s) = \frac{G_a(s)}{1+G_a(s)}. \tag{4.20}$$

The sensitivity function is proper, with in particular zeroes and poles coincident with open loop and closed loop poles, respectively.

$$S(s) = \frac{1}{1+G_a(s)} = \frac{d(s)d_c(s)}{d_{cc}(s)}. \tag{4.21}$$

The value of the function for $s \to \infty$ is always one, and for $s \to 0$, if the steady state loop gain is high, the function is approximate by $\frac{1}{G_a(s)}$.

The sum of the two functions $T + S = 1$ is always one, so one can be recovered from the other

$$G_{eq1}(s) = 1 - S(s). \tag{4.22}$$

The closed loop f control functions relating measurement noise to control activity and input noise to output can be represented as

$$G_{equ}(s) = G_c(s)S(s), \quad G_{eqd}(s) = G(s)S(s). \tag{4.23}$$

At the high frequencies they approximate $G_c(s)$ and $G(s)$, respectively, as the sensitivy function goes to one. This result carries to an observation that will be very important when approaching the requirements of a control problem.

Note 4.2 Control activity

The process is strictly proper, so at high frequencies G_{eqd} will goes to zero. Viceversa, the compensation filter is usually only proper, this means that at high frequencies G_{equ} will have a finite (eventually high) gain with consequences on the amplitude of the control due to measurement noises or the reference signal at high frequencies. This justifies the name control activity.

The sensitivity function plays among the others a central role in a closed loop control system. We have seen that all closed loop functions can be expressed from this one. Moreover, its property shows the second reason, after stability and dynamic shaping, that justifies the use of a feedback for control: its capability to reduce uncertainties present in the process. It is this property that assigned the name sensitivity traditionally assigned to this function.

Errors to disturbances and to reference tracking

Expression (4.12) shows that the sensitivity function is the relationship between reference signal and tracking error. Analogously, from figure 4.5, we can show that the same sensitivity function is the relationship between output disturbances w_2 and controlled output *y*. Ability of the designer to achieve sensitivity with small gain guarantees the capability of a controlled system output to follow a desired signal and to reduce the effects on the output of disturbances.

Infinitesimal plant variations

Let consider now plant uncertainties and as introductory case consider infinitesimal variations to the t.f. With $G_a(s)$ as an independent variable derive G_{eq} as a function of $G_a(s)$ and express relative variations of the two functions, it results the *relative sensitivity* of the closed loop t.f. with respect to open loop variations:

$$\begin{aligned} \frac{dG_{eq}(s)}{dG_a(s)} &= \frac{1}{(1+G_a(s))^2} \\ \frac{dG_{eq}(s)}{G_{eq}(s)} &= \frac{1}{1+G_a(s)} \cdot \frac{dG_a(s)}{G_a(s)} \end{aligned} . \tag{4.24}$$

The result can be extended from unstructured to structured variations. Let call θ a changing parameter we can write:

$$\frac{dG_{eq}(s)}{G_{eq}(s)} = \frac{1}{1+G_a(s)} \cdot \frac{\partial G_a(s) \cdot \theta}{\partial \theta \cdot G_a(s)} \cdot \frac{d\theta}{\theta}$$

In both cases the sensitivity function represents the sensitivity variations of the closed loop with respect to variations of the open loop.

Finite plant variations

More interesting is case of finite plant variations. Let represent uncertainty as an additive error operator:

$$\tilde{G}_a(s) = G_a(s) + \Delta_{G_a}(s)$$

With a simple substitution it is verified that:

$$\frac{\tilde{G}_{eq}-G_{eq}}{G_{eq}}=\frac{\Delta_{G_{eq}}}{G_{eq}}=\frac{1}{1+\tilde{G}_a}\cdot\frac{\Delta_{G_a}}{G_a}$$
$$\left|\frac{\Delta_{G_{eq}}}{G_{eq}}\right|\le\left|\frac{1}{1+\tilde{G}_a}\right|\cdot\left|\frac{\Delta_{G_a}}{G_a}\right| \tag{4.25}$$

Relative variations of the closed loop with respect to relative variation of the open loop are given by the sensitivity function in perturbed conditions[6].

Plant non-linearities

Approach the design of the control of a non-linear system is arduous. There exist theories that approach particular aspects but not an established general theory.
In many cases, however, satisfactory results are obtained by simply using linearized models and linear controls. The sensitivity function shows how the feedback has the property to linearize the controlled system, in spite of the non-linearity of the plant.
Let assume that the plant is represented by a linear model with a non-linear input gain with non-linearity index n_l. We can express the output of this to a control $u(t)$ as:

$$y(t)=y(u(t))$$

Let close a control loop where stability is guaranteed.

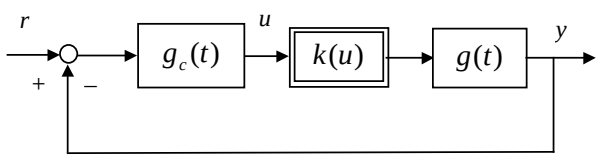

Fig. 4.6 Feedback loop in the presence of non-linearity

The close loop system is a non-linear system, as well:

$$y(t)=y_{eq}(r(t))$$

where we can consider the response to a nominal reference signal:

$$u(t)=g_c(t)*(r(t)-y(t)),$$
$$y(t)=g(t)*u'(t),$$
$$u'(t)=k(u(t)),$$

[6] Don't miss that the sensitivity function must be computed in the perturbed conditions.

If we introduce a perturbation, with respect to the nominal signals we can write the perturbations as

$$\delta u(t) = g_c(t) * (\delta r(t) - \delta y(t)) ,$$

$$\delta u'(t) = \frac{dk}{du} \cdot \delta u(t) .$$

If we Laplace transform the perturbed signals linking them through the linearized t.f. of the loop, interpreting non-linearity as a parametric disturbance around a nominal value with minimum and maximum linearized gain, as introduced in chapter 1, we can represent a nominal loop t.f. with a perturbation:

$$G_a(s) = G(s) \cdot G_c(s) \cdot k_{nl} , \quad k_{nl} = \frac{\left.\frac{dk}{du}\right|_M + \left.\frac{dk}{du}\right|_m}{2} ,$$

$$\tilde{G}_a(s) = G(s) \cdot G_c(s) \cdot k_{nl} \cdot (1 + \Delta_{nl}), \quad |\Delta_{nl}| \le nl = \frac{\left.\frac{dk}{du}\right|_M - \left.\frac{dk}{du}\right|_m}{2 \cdot k_{nl}}$$

$$\frac{\Delta_{G_a}(s)}{G_a(s)} = \Delta_{nl} .$$

The modulus of the relative perturbation of the linearized model has been defined as the index of non-linearity *nl* in chapter 1.
Using (4.25) we can derive the index of non-linearity of the closed loop:

$$\left| \frac{\tilde{G}_{eq} - G_{eq}}{G_{eq}} \right| = \left| \frac{\Delta_{G_{eq}}}{G_{eq}} \right| \le \left| \frac{1}{1 + \tilde{G}_a} \right| \cdot \left| \frac{\Delta_{G_a}}{G_a} \right| ,$$

$$nl_{eq} \le \left| \frac{1}{1 + \tilde{G}_a} \right| \cdot nl$$

This result shows, once more, the role of the sensitivity function: the index of non-linearity of the closed loop is reduced, with respect to the open loop by the sensitivity function. Therefore for the range of frequencies where the sensitivity function gain is small the closed loop behaves closely to a linear system even if the plant is non-linear.
Not casually, the need to linearized the characteristics of the first electronic amplifiers, and to understand the interesting properties achieved in closed loop started with Nyquist e Bode in the '40s the actual development of automatic controls.

4.3.3 SISO systems – two degrees of freedom

A more general form of control, with respect to 4.5, is when reference *r* and feedback signal y_r contribute separately, not simply as a difference, to generate the control. In

this case the control loop can be represented as one of the following equivalent schemas, equivalent in the sense that each one can be obtained from the others by algebraic transformations. $G_C'(s)$ and $H(s)$ are proper t.f.s and, $G_C(s)=G_C'(s)\,H(s)$. This structure is called *two degree of freedom control* , as two functional blocks, instead of the only one of the previous section, are object of design.

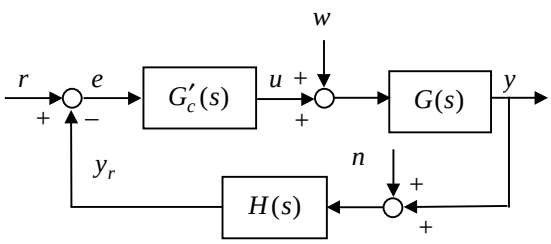

Fig. 4.7 Feedback control two degree of freedom form 1

The closed loop t.f. of interest are now

$$\begin{vmatrix} u \\ y \\ y_r \end{vmatrix} = \frac{1}{1+GG_c'H} \begin{bmatrix} G_c' & -HG & -G_c'H \\ GG_c' & G & -GG_c'H \\ GG_c'H & HG & H \end{bmatrix} \cdot \begin{vmatrix} r \\ w \\ n \end{vmatrix}. \tag{4.26}$$

Robust stability requires that all t.f. of (4.26) are asymptotically stable

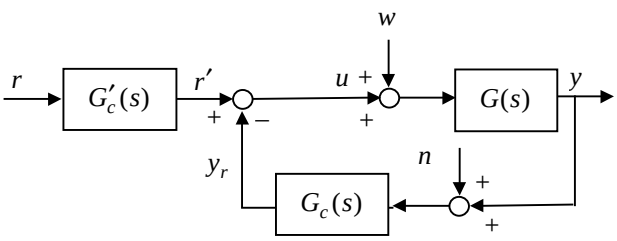

Fig. 4.8 Feedback control two degree of freedom form 2

The t.f. of interest in this structure are

$$\begin{vmatrix} y \\ y_r \end{vmatrix} = \frac{1}{1+GG_c} \begin{bmatrix} G & -GG_c \\ GG_c & G_c \end{bmatrix} \cdot \begin{vmatrix} w \\ n \end{vmatrix}. \tag{4.27}$$

For robust stability must be stable $G_c'(s)$ and the t.f. in (4.27).

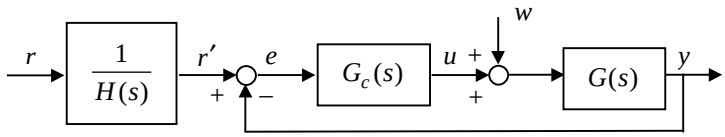

Fig. 4.9 Feedback control two degree of freedom form 3

For internal stability must be stable $\frac{1}{H(s)}$, with considerations identical to the scheme of figure 4.8.

4.3.4 Multivariable systems

The essential aspects of a feedback loop are similar for SISO and MIMO systems.
In this section we replicate previous results to evidence the particularities introduced by multivariable systems.
With reference to figure 4.5 *y*, *u*, *r* e *w*, are now vectors of signals and the elements present in the block diagram are t.f. matrices. The closed loop (4.11) becomes:

$$\begin{vmatrix} u \\ y \end{vmatrix} = \begin{bmatrix} G_c(I+GG_c)^{-1} & -G_c(I+GG_c)^{-1}G \\ (I+GG_c)^{-1}GG_c & (I+GG_c)^{-1}G \end{bmatrix} \cdot \begin{vmatrix} r \\ w \end{vmatrix} . \tag{4.28}$$

Product of operators do not commute, as they are matrices. Nevertheless, if the following lemma of inversion of matrices is used, a second form alternative to (4.28) exists to represent the closed loop.

Lemma 4.2 Inversion of matrices

Given two matrices *T* e *U* of compatible dimensions, then:

$$T(I+UT)^{-1} = (I+TU)^{-1}T \; ;$$

$$(I+UT)^{-1} = I - U(I+TU)^{-1}T \; .$$

Given a square matrix V, then:

$$V(I+V)^{-1} = (I+V)^{-1}V \; .$$

An alternative form of closed loop t.f. matrix is:

$$\begin{vmatrix} u \\ y \end{vmatrix} = \begin{bmatrix} (I+G_cG)^{-1}G_c & -(I+G_cG)^{-1}G_cG \\ G(I+G_cG)^{-1}G_c & G(I+G_cG)^{-1} \end{bmatrix} \cdot \begin{vmatrix} r \\ w \end{vmatrix}. \tag{4.29}$$

We recognize from (4.28) or (4.29) two alternate forms of sensitivity functions $(I+GG_c)^{-1}$ and $(I+G_cG)^{-1}$, the close loop t.f. matrix with unitary feedback $(I+GG_c)^{-1}GG_c$ the control activity $G_c(I+GG_c)^{-1}$, finally, consider the relationship between sensitivity and complementary sensitivity functions

$$(I+G_cG)^{-1}G_cG = I-(I+G_cG)^{-1}.$$

4.4 State feedback control

A classical result of system theory shows that if a system is controllable using algebraic state feedback can be positioned arbitrarily all closed loop poles

$$u = -H \cdot x \tag{4.30}$$

where here *H*, differently from the previous section, is a matrix of coefficients.
To visualize this result it is convenient to represent the system adopting the control canonical form.

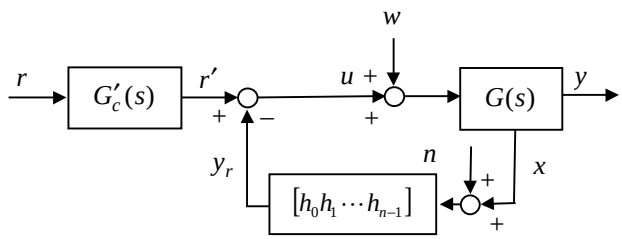

Fig. 4.10 State feedback control

$$H = [h_0 \quad \cdots \quad h_{n-1}]$$

$$u(s) = G_c'(s) \cdot r(s) - [h_0 \quad \cdots \quad h_{n-1}] \cdot \begin{bmatrix} x_1(s) \\ \vdots \\ x_n(s) \end{bmatrix}.$$

With the control canonical form state feedback brings to the following block diagram, obtained by shifting all feedback points to the first state

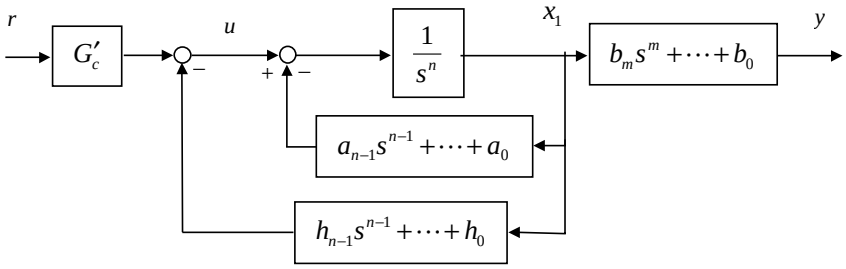

Fig. 4.11 State feedback in a control canonical form

Introducing the partial state, we can write the feedback signal as

$$y_r(s) = m(s) \cdot \xi(s), \quad m(s) = h_{n-1}s^{n-1} + \cdots h_0$$

$$y(s) = n(s) \cdot \xi(s)$$

substituting

$$d(s) \cdot \xi(s) = u(s), \quad u(s) = r'(s) - y_r(s)$$
$$\big(d(s) + m(s)\big) \cdot \xi(s) = r'(s)$$
$$\xi(s) = \frac{1}{d_{cc}(s)} r'(s), \quad d_{cc}(s) = d(s) + m(s)$$

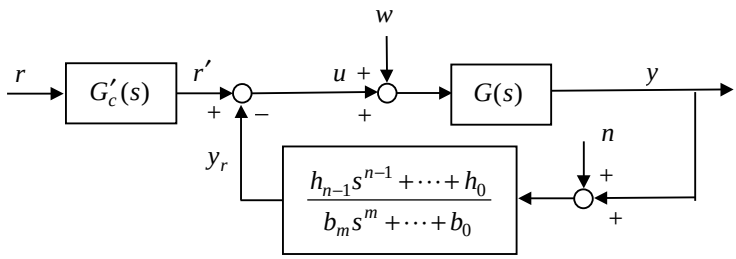

Fig. 4.12 State feedback transferred on the output

If we translate state feedback on the output the loop t.f. function assumes the form:

$$G_a(s) = \frac{h_{n-1} \cdot s^{n-1} + \cdots + h_1 \cdot s + h_0}{s^n + \cdots + a_1 \cdot s + a_0}$$

with closed loop characteristic function given by:

$$d_{cc}(s) = s^n + \cdots (a_{n-1} + h_{n-1}) \cdot s^{n-1} + \cdots + (a_1 + h_1) \cdot s + h_0 + a_0$$

This show that all coefficients of the polynomial can be freely assigned and so all closed loop poles.
Observing the closed loop reference-output relationship

$$G_{eqr \to y}(s) = G_c'(s) \frac{n(s)}{d_{cc}(s)} \tag{4.31}$$

we see that the plant zeroes appear unchanged in the closed loop, this justifies the presence of an input block $G_c'(s)$ on the reference used to cancel undesirable zeroes, with the only caution to choose $G_c'(s)$ proper and stable.

Extended system

State feedback can be applied to a four gates extended system

$$\begin{bmatrix} \dot{x} \\ z \\ y \end{bmatrix} = \left[\begin{array}{c|cc} A & B_1 & B_2 \\ \hline C_1 & 0 & D_{12} \\ C_2 & D_{21} & 0 \end{array}\right] \cdot \begin{bmatrix} x \\ w \\ u \end{bmatrix} \tag{4.32}$$

In this case the measures y are not used, as the control is realized with a simple state feedback

$$u = -Hx \tag{4.33}$$

The requirements of the design are to reduce sensitivity of the objectives z from disturbances w.
The closed loop operator, resulting from state feedback, is the following

$$z = \left[\begin{array}{c|c} A - B_2 H & B_1 \\ \hline C_1 - D_{12} H & 0 \end{array}\right] \cdot w \cdot \tag{4.34}$$

It can be considered as a generalization of the sensitivity function discussed in the previous section.
If $A - B_2 H$ represents an asymptotically stable closed loop system, objectives z are bounded in the presence of bounded w. Operator (4.34), with a proper choice of the objectives, will be at the basis of the design technique for synthesizing a controller. To guarantee asymptotic stability is required that the pair (A, B_2) is *stabilisable*.

Let note that stabilizability is a weaker condition than controllability *controllability*: the latter requires the complete controllability of all states of the system, the former that uncontrollable modes of the system are asymptotically stable.

Example 4.3 Extended system to guarantee reference tracking

The control schema is given in figure 4.10. The external signal in this example is the reference, the objective is the difference between output and reference. In order to drive the system by the difference between reference and feedback signal we operate a change in the control variable

$$u = r' + u', \quad u' = -y_r = -Hx \tag{4.35}$$

as in figure 4.12, moreover the whole state is measurable $y' = x$. The reference signal is filtered, and the two models of the plant and of the reference generator are

$$y = \left[\begin{array}{c|c} A_p & B_p \\ \hline C_p & 0 \end{array}\right] \cdot u, \quad r' = \left[\begin{array}{c|c} A_r & B_r \\ \hline C_r & 0 \end{array}\right] \cdot r \tag{4.36}$$

The extended model (4.32) assumes the following form

$$\begin{bmatrix} \dot{x} \\ z \\ y' \end{bmatrix} = \left[\begin{array}{c|cc} \begin{bmatrix} A_p & B_p C_r \\ 0 & A_r \end{bmatrix} & \begin{bmatrix} 0 \\ B_r \end{bmatrix} & \begin{bmatrix} B_p \\ 0 \end{bmatrix} \\ \hline \begin{bmatrix} C_p & -C_r \end{bmatrix} & 0 & 0 \\ \begin{bmatrix} I & 0 \end{bmatrix} & 0 & 0 \end{array}\right] \cdot \begin{bmatrix} x \\ r \\ u' \end{bmatrix} \tag{4.37}$$

As a special case no dynamics is assigned to the reference

$$\begin{bmatrix} \dot{x} \\ z \\ y \\ y' \end{bmatrix} = \left[\begin{array}{c|cc} A_p & B_p & B_p \\ \hline C_p & -I & 0 \\ C_p & 0 & 0 \\ I & 0 & 0 \end{array}\right] \cdot \begin{bmatrix} x \\ r \\ u' \end{bmatrix} \tag{4.38}$$

The closed loop system has the following form

$$\begin{bmatrix} \dot{x} \\ z \\ y \\ y' \end{bmatrix} = \left[\begin{array}{c|c} A_p - B_p H & B_p \\ \hline C_p & -I \\ C_p & 0 \\ I & 0 \end{array}\right] \cdot \begin{bmatrix} x \\ r \end{bmatrix} \tag{4.39}$$

The relationship $r \to y$ (4.31) can be seen in (4.39), where zeroes of the closed loop are unchanged with respect to the open loop. The relationship $r \to z$ (the sensitivity function) is invertible, the inverse relationship $z \to r$ is obtained by using $z = C_p x - r$:

$$\begin{bmatrix} \dot{x} \\ r \end{bmatrix} = \left[\begin{array}{c|c} A_p - B_p H + B_p C_p & -B_p \\ \hline C_p & -I \end{array}\right] \cdot \begin{bmatrix} x \\ z \end{bmatrix} \tag{4.40}$$

As it is understandable the eigenvalues of the coefficient matrix $A_p - B_p H + B_p C_p$ of the inverted system are the zeroes of the direct one, and precisely the roots of the polynomial $d_{cc}(s) - n(s)$.

Example 4.1 A control problem with disturbances on input

Let consider the following model

$$\begin{bmatrix} \dot{x} \\ z \\ y \end{bmatrix} = \left[\begin{array}{cc|cc} 0 & 1 & 0 & 0 \\ -1 & 0.02 & 1 & 1 \\ \hline 1 & 0 & 0 & 1 \\ \multicolumn{2}{c|}{I} & 0 & 0 \end{array}\right] \cdot \begin{bmatrix} x \\ w \\ u \end{bmatrix} \tag{4.41}$$

It represents a system with disturbances on input, and objective that penalizes the effect of disturbances on output added to the input needed to control the system. With feedback control of type (4.33) determine the feedback H that minimizes the gramian of (4.34) with the method proposed in theorem 3.2. With this feedback evaluate the H_2 norm and a bound of the H_∞ norm of the closed loop disturbance operator. As a second step, let try to integrate the two techniques proposed in chapter 3 to determine a control that minimizes the upper bound of the H_∞ norm and compare it with the previous one.

Solution

Let integrate the algorithms of theorems 3.2 e 3.4, solving the minimum norm problem for decreasing values of γ. The solution that minimizes the gramian has a feedback $H = (1 \quad 0.04)$, with a H_2 norm equal to 0.2 and H_∞ norm equal to 2.1. However, the best feedback that guarantees an upper bound of the H_∞ norm less than 1, that is almost the best achievable result, is $H = (0.95 \quad 4614)$. In this condition the H_2 norm is now equal to 45 and the achieved H_∞ norm assume a value of 0.9.

You note that in the attempt to reduce the H_∞ norm the H_2 norm increases.

Example 4.2 Reference tracking with penalty on the input

Let apply the tracking problem (4.38) to the same model of the previous example, by introducing a second objective that penalizes independently the control signal The resulting model is the following

$$\begin{bmatrix} \dot{x}_1 \\ \dot{x}_2 \\ \begin{bmatrix} z_1 \\ z_2 \end{bmatrix} \\ y \end{bmatrix} = \left[\begin{array}{cc|cc} 0 & 1 & 0 & 0 \\ -1 & 0.02 & 1 & 1 \\ \hline 1 & 0 & -1 & 0 \\ 0 & 0 & 0 & 1 \\ \multicolumn{2}{c|}{I} & 0 & 0 \end{array}\right] \cdot \begin{bmatrix} x_1 \\ x_2 \\ r \\ u \end{bmatrix} \tag{4.42}$$

Let answer to the questions of the previous example.
Solution
If you approach this problem you will discover that the H_∞ norm cannot be reduced under the value you will achieve in minimizing the gramian, and the controlled system is unable to track any arbitrary reference.

Example 4.3 Colored reference tracking with penalty on the input

If we know that the reference will not be arbitrary but will belong to a class bounded in frequency we filter the reference generator with the objective to color the signal[7]. The model will be similar to the one in figure (4.37). Let build the extended system and solve the state feedback problem when the reference filter (4.36) is given by

$$r' = \left[\begin{array}{cc|c} 0 & 1 & \\ -1 & -1.2 & 1 \\ \hline 1 & & \end{array}\right] \cdot r \tag{4.43}$$

The extended system is better defined by the next block diagram

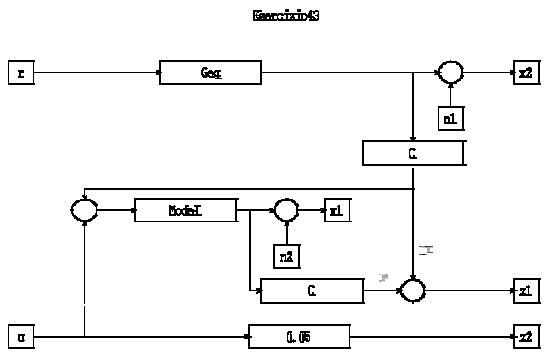

Fig. 4.13 Block diagram of the extended system to track a colored reference

For technical reasons the measured states appear in the figure affected by measurement noises, but this is irrelevant in the present case, and the feedback is performed assuming perfect state knowledge.
Solve a state feedback control to track the reference.

[7] The definition colour has been generated in the world of stochastic processes. Here a white noise is the one with constant spectre in frequency. If the white noised is passed through a dynamic filter the resulting output stochastic process has spectre not any more constant in frequency, but shaped by the filter transfer function. It is called now a coloured noise.

Solution
Solution of this problem deserves several interesting observations.
Optimum H_2 and H_∞ problems offer different solutions, and only the solution with a relative low H_∞ norm guarantees good tracking performances. This can be tested to the step response and demonstrates the superiority of the H_∞ norm as a measure of satisfaction of requirements.
Moreover the tracking performance is influenced by the weight penalizing the control. You may experience that weights higher than the selected value of 0.05 offer poor tracking performances. This shows that performances are achieved at expenses of the control activity that will not be sufficient in the presence of too high weights on the control.

4.5 Control using the state observer

An observer based state feedback is the simplest structure used in any text book of system theory [2] to introduce theoretically control. The controller is composed by an asymptotic state observer from output measurements followed by an algebraic feedback from the estimated states. Since the beginning (Kalman) a characteristic property of this structure called *separation* between observer and control attracted the interest of the scientists. In fact, the closed loop poles of this control result from the separate assignment of the observer poles and of the state feedback poles obtained as if the real states were available. Both, control dynamics and observer dynamics, via duality, are achieved with an identical state feedback approach, as described in section 4.4.
However, simply exploiting separation and pole assignment was not enough to obtain good controls, as it became soon clear (Athans) after the discovery of this property. The continuing interest for this structure, is today, based on two more recent observations:

- Any control that guarantees internal stabilization can be derived from an observer-feedback structure [3] (Youla parameterization);
- Modern results on robust control design based on H_∞ norm, show that a control satisfying assigned specifications satisfies a form of weak separation between observer and state feedback.

For these reasons state observer and state feedback are the logical steps for designing closed loop controls. This point of view is endorsed in this book and exploited in the following phases of analysis and design.

4.5.1 The asymptotic state observer

The ideal case

Given a state variable representation

$$\dot{x}(t) = A \cdot x(t) + B \cdot u(t)$$
$$y(t) = C \cdot x(t)$$

where the pair *C*, *A* is *detectable*, the state can be reconstructed with asymptotic error zero through a state observer having the following dynamics derived from the system:

$$\dot{\hat{x}}(t) = A \cdot \hat{x}(t) + B \cdot u(t) + K \cdot (y - C \cdot \hat{x}(t))$$
$$\hat{y}(t) = C \cdot \hat{x}(t)$$

Let note that the detectability condition is weaker than *observability*, simply requiring for the unobservable modes asymptotic stability.
With any feedback matrix *K* guaranteeing dynamics of *A* - *KC* asymptotically stable, and for any control *u*, observer state $\hat{x}$ converges to the system state. Moreover, if the pair *C*, *A* is completely observable all observer poles can be assigned arbitrarily.
This structure is called *asymptotic state observer* or *asymptotic state reconstructor*.
The demonstration of the property is immediate, building the error model obtained by performing the difference between system and observer states:

$$\hat{e}(t) = x(t) - \hat{x}(t)$$
$$\hat{e}_y(t) = y(t) - \hat{y}(t)$$
$$\dot{\hat{e}}(t) = A \cdot \hat{e}(t) - K \cdot C \cdot \hat{e}(t) = (A - K \cdot C) \cdot \hat{e}(t)$$
$$K \qquad A - K \cdot C \qquad \text{asymptotically stable}$$

The block diagram of a system followed by the state observer is given by figure 4.14, where $G(s)$ e $\hat{G}(s)$ represent system and observer, respectively, where system input and output measurements pilot the reconstructor filter.

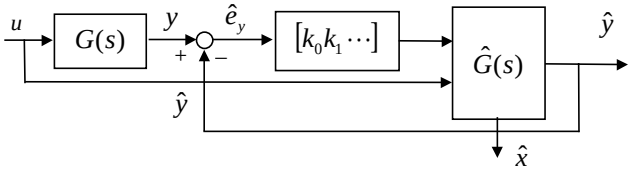

Fig. 4.14 State observer

As a simple example we consider a SISO system, represented by an observer canonical form. The blocks linking system input and output to reconstructed state and output are easily represented

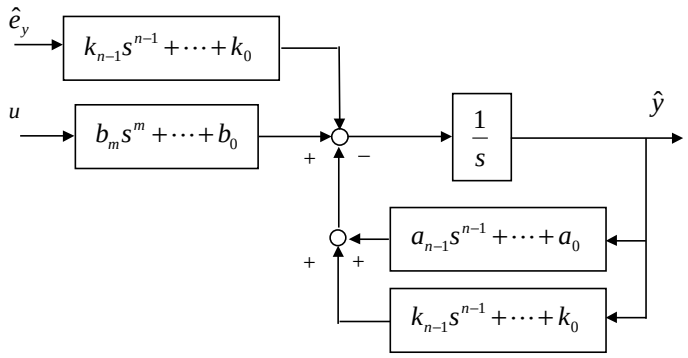

Fig. 4.15 Transfer function of the filter resulting from the state observer

$$\hat{y}(s)=\frac{(b_m\cdot s^m+\cdots+b_0)\cdot u(s)+(k_{n-1}\cdot s^{n-1}+\cdots+k_0)\cdot y(s)}{s^n+(a_{n-1}+k_{n-1})\cdot s^{n-1}+\cdots+(a_0+k_0)}=$$
$$\frac{n(s)\cdot u(s)+k(s)\cdot y(s)}{d(s)+k(s)}=\frac{n(s)\cdot u(s)+k(s)\cdot y(s)}{d_{co}(s)}$$

where k_i are the coefficient of the feedback matrix K and $d_{co}(s)$ is the characteristic polynomial of the observer dynamics.

Real case

Previous results assume that the process is perfectly known. We will see in the next chapters that in the presence of certain type of uncertainties the inherent robustness given by the feedback to the observer, properly chosen, allow to maintain output reconstruction error $\hat{e}_y(t)$ bounded and small for any bounded input $u(t)$.
We introduce here the special case where the model approximation error $e_m(s)$:

$$e_m(s)=(G_p(s)-G(s))\cdot u(s)=\Delta_m\cdot u(s)\cdot$$

is represented by an uncertainty model Δ_m asymptotically stable.
Let express the output error $\hat{e}_y$, where the t.f. represents the model, irrespective from the system dynamics that generate the output:

$$\hat{e}_y(s) = y(s) - \hat{y}(s) = y(s) - \frac{(b_m \cdot s^m + \cdots + b_0) \cdot u(s) + (k_{n-1} \cdot s^{n-1} + \cdots + k_0) \cdot y(s)}{s^n + (a_{n-1} + k_{n-1}) \cdot s^{n-1} + \cdots + (a_0 + k_0)} =$$

$$y(s) - \frac{n(s) \cdot u(s) + k(s) \cdot y(s)}{d(s) + k(s)} =$$

$$\frac{d(s) \cdot y(s) - n(s) \cdot u(s)}{d_{co}(s)} = \frac{d(s)}{d_{co}(s)} \cdot (y(s) - G(s) \cdot u(s));$$

$$\hat{e}_y(s) = \frac{d(s)}{d_{co}(s)} \cdot e_m(s) \tag{4.44}$$

$$d_{co}(s) = s^n + (a_{n-1} + k_{n-1}) \cdot s^{n-1} + \cdots + (a_0 + k_0)$$

is the characteristic polynomial of the observer dynamics.
Previous results show that the output reconstruction error from the observer is obtained from the system approximation error filtered from the sensitivity function of the closed loop present in the observer.
Properly designing this sensitivity function will allow to obtain reductions in selected frequency bands of the effects on the estimation errors of system uncertainties.

The extended system

The previous observer is generalized with the introduction of an extended system.
Let consider the following estimation problem in the system (4.45)

$$\begin{bmatrix} \dot{x} \\ y_u \\ y \end{bmatrix} = \left[\begin{array}{c|c} A & B_1 \\ \hline C_1 & 0 \\ C_2 & D_{21} \end{array}\right] \cdot \begin{bmatrix} x \\ w \end{bmatrix} \tag{4.45}$$

where w are disturbances, y the measures, and $y_u = C_1 x$ the unmeasurable outputs we want to estimate, and generate the following extended system:

$$\begin{bmatrix} \dot{x} \\ z \\ y \end{bmatrix} = \left[\begin{array}{c|cc} A & B_1 & 0 \\ \hline -C_1 & 0 & I \\ C_2 & D_{21} & 0 \end{array}\right] \cdot \begin{bmatrix} x \\ w \\ \hat{y}_u \end{bmatrix} \tag{4.46}$$

where the estimate $\hat{y}_u$ is chosen in order to guarantee a small estimation error z

$$z = -C_1 x + \hat{y}_u \tag{4.47}$$

in front of the disturbances w.
The dynamic filter that generates y_u from measurements to apply to (4.45) is an asymptotic observer.
In fact, derive from (4.45) the following state observer

$$\begin{bmatrix} \dot{\hat{x}} \\ \hat{y}_u \\ \hat{y} \end{bmatrix} = \left[\begin{array}{c|c} A & K \\ \hline C_1 & 0 \\ C_2 & 0 \end{array}\right] \cdot \begin{bmatrix} \hat{x} \\ y - \hat{y} \end{bmatrix} \tag{4.48}$$

and the following dynamic filter derived by substituting $\hat{y}_u$ and $\hat{y}$

$$\hat{y}_u = \left[\begin{array}{c|c} A - KC_2 & K \\ \hline C_1 & 0 \end{array}\right] \cdot y \tag{4.49}$$

To verify the achieved performances, the error model is computed by performing the difference between (4.45) and (4.48). Taking into account the following relationships

$$\begin{aligned} z &= -C_1 x + \hat{y}_u = -C_1(x - \hat{x}) = -C_1 \hat{e} \\ \hat{e}_y &= y - \hat{y} = C_2 \hat{e} + D_{21} w \end{aligned} \tag{4.50}$$

the state error has the following form:

$$\begin{bmatrix} \dot{\hat{e}} \\ z \end{bmatrix} = \left[\begin{array}{c|c} A - KC_2 & B_1 - KD_{21} \\ \hline -C_1 & 0 \end{array}\right] \cdot \begin{bmatrix} \hat{e} \\ w \end{bmatrix} \tag{4.51}$$

If $A - KC_2$ represents an asymptotically stable dynamics, the objective z is bounded in the presence of bounded disturbances. This requires that the pair (A, C_2) is detectable.

Note 4.3 Duality

We should not miss that the transpose of (4.51) is identical to the closed loop error operator of the state feedback (4.34). This evidences the duality between observer and state feedback. Identically, the design of an observer, by transposing the model, is translated into a problem of state feedback, and viceversa. Disturbances and objectives through duality interchange their role.

Example 4.4 Output estimation in the presence of colored noises

In the following example the output of the system is affected by colored noise. Process and disturbance dynamics are given by the following models

$$y = \left[\begin{array}{c|c} A_p & B_p \\ \hline C_p & 0 \end{array}\right] \cdot u, \quad w' = \left[\begin{array}{c|c} A_w & B_w \\ \hline C_w & 0 \end{array}\right] \cdot w$$

The extended system (4.32) where objectives and measures coincide assume the following form

$$\begin{bmatrix} \dot{x} \\ z \\ y \end{bmatrix} = \left[\begin{array}{c|cc} \begin{bmatrix} A_p & 0 \\ 0 & A_r \end{bmatrix} & \begin{bmatrix} 0 \\ B_w \end{bmatrix} & \begin{bmatrix} B_p \\ 0 \end{bmatrix} \\ \hline \begin{bmatrix} C_p & C_w \end{bmatrix} & 0 & I \\ \begin{bmatrix} C_p & C_w \end{bmatrix} & 0 & 0 \end{array}\right] \cdot \begin{bmatrix} x \\ w \\ u \end{bmatrix} \tag{4.52}$$

An estimator can be built and the result (4.51) can be personalized to the specific case.

Example 4.5 Output reconstruction errors in the presence of disturbances on the measures

The extended system in the presence of additive measurement noises has the following form

$$\begin{bmatrix} \dot{x} \\ z \\ y \end{bmatrix} = \left[\begin{array}{c|cc} A & 0 & B_2 \\ \hline C_1 & 0 & I \\ C_2 & I & 0 \end{array}\right] \cdot \begin{bmatrix} x \\ w \\ u \end{bmatrix} \tag{4.53}$$

The estimation error with an estimator (4.48) is

$$\begin{bmatrix} \dot{\hat{e}} \\ \hat{e}_y \end{bmatrix} = \left[\begin{array}{c|c} A - KC_2 & -K \\ \hline C_2 & I \end{array}\right] \cdot \begin{bmatrix} \hat{e} \\ w \end{bmatrix} \tag{4.54}$$

You can verify that the operator (4.54) is the sensitivity function of the feedback loop introduced by the observer, it is equivalent to the t.f. (4.44) of the previous section. It is sufficient to note that the operator is invertible (substituting $w = \hat{e}_y - C_2\hat{e}$), then the number of zeros is equal to the number of poles, the poles have been assigned by the feedback introduced by the observer, its zeros (the poles of the inverse operator) are the poles of the open loop.

Example 4.4 Output estimation with disturbances on input and on measurements

Let consider the following extended system

$$\begin{bmatrix} \dot{x} \\ z \\ y \end{bmatrix} = \left[\begin{array}{cc|ccc} 0 & 1 & 0 & 0 & 0 \\ -1 & 0.02 & 1 & 0 & 1 \\ \hline -1 & 0 & 0 & 0 & 1 \\ 1 & 0 & 0 & 1 & 0 \end{array}\right] \cdot \begin{bmatrix} x \\ \begin{bmatrix} w_1 \\ w_2 \end{bmatrix} \\ u \end{bmatrix} \tag{4.55}$$

with disturbances w_1 on the inputs and noise w_2 on the measurements.

As in the exercise (4.54) determine the feedback gain that minimizes the H_2 norm and that guarantees an upper bound of the H_∞ norm of the estimation operator error.
Solution
Applying the duality solve the estimation as a state feedback problem.

4.5.2 Closing the loop through the state observer

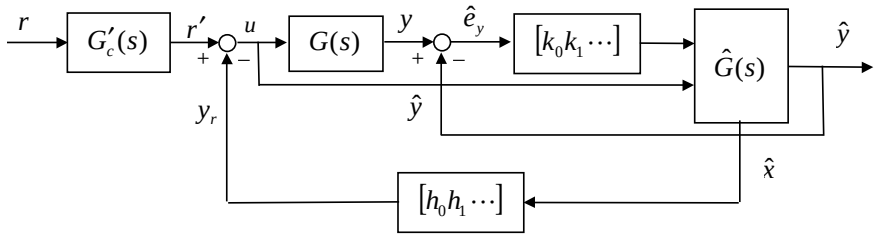

Fig. 4.16 Feedback control structure based on observer and state feedback

The best way to show the structure and properties of an observer based state feedback is to adopt the extended system (4.32) to represent the problem and adopt results of the previous two sections.
We will explain the result by two distinct approaches dual one of the other.

State estimation – feedback of the estimated states

Given the problem model represented by the extended system (4.32), we approach the solution of closing a feedback from measurements y in two steps:

- In the first step we estimate the z, using the measures y with arbitrary u[8];
- In the second step we consider satisfy requirements on the objectives (or their estimates) through a feedback from the estimated states.

The first step brings forth a state observer given by the following representation (4.56)

$$\begin{bmatrix} \dot{\hat{x}} \\ \hat{z} \\ \hat{y} \end{bmatrix} = \left[\begin{array}{c|cc} A & K & B_2 \\ \hline C_1 & 0 & D_{12} \\ C_2 & 0 & 0 \end{array}\right] \cdot \begin{bmatrix} \hat{x} \\ \hat{e}_y \\ u \end{bmatrix} \tag{4.56}$$

with $\hat{e}_y = y - \hat{y}, \quad \hat{e}_z = z - \hat{z}$. It can be rewritten as

[8]Pay attention that here u is the control not the estimate of the unmeasurable outputs as in (4.45).

$$\begin{bmatrix} \dot{\hat{x}} \\ \hat{z} \\ y \end{bmatrix} = G_2 \cdot \begin{bmatrix} \hat{x} \\ \hat{e}_y \\ u \end{bmatrix} = \left[\begin{array}{c|cc} A & K & B_2 \\ \hline C_1 & 0 & D_{12} \\ C_2 & I & 0 \end{array}\right] \cdot \begin{bmatrix} \hat{x} \\ \hat{e}_y \\ u \end{bmatrix} \tag{4.57}$$

and depicted in the next figure

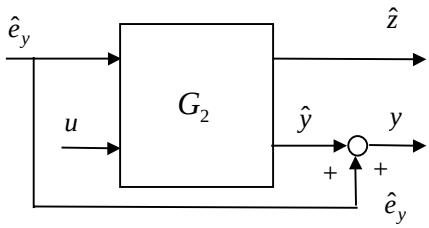

Fig. 4.17 State observer

The error model, difference between (4.32) e (4.56) is

$$\begin{bmatrix} \dot{\hat{e}} \\ \hat{e}_z \\ \hat{e}_y \end{bmatrix} = \left[\begin{array}{c|cc} A & B_1 & -K \\ \hline C_1 & 0 & 0 \\ C_2 & D_{21} & 0 \end{array}\right] \cdot \begin{bmatrix} \hat{e} \\ w \\ \hat{e}_y \end{bmatrix} \tag{4.58}$$

or also

$$\begin{bmatrix} \dot{\hat{e}} \\ \hat{e}_z \\ \hat{e}_y \end{bmatrix} = G_1 \cdot \begin{bmatrix} \hat{e} \\ w \end{bmatrix} = \left[\begin{array}{c|c} A - KC_2 & B_1 - KD_{21} \\ \hline C_1 & 0 \\ C_2 & D_{21} \end{array}\right] \cdot \begin{bmatrix} \hat{e} \\ w \end{bmatrix} \tag{4.59}$$

We note that the error in estimating z, is a function of disturbances w but it doesn't depend on the control. It is given by the operator

$$\begin{bmatrix} \dot{\hat{e}} \\ \hat{e}_z \end{bmatrix} = \left[\begin{array}{c|c} A - KC_2 & B_1 - KD_{21} \\ \hline C_1 & 0 \end{array}\right] \cdot \begin{bmatrix} \hat{e} \\ w \end{bmatrix} \tag{4.60}$$

Again, to guarantee asymptotic stability is sufficient that the pair (A, C_2) is detectable. The error norm can be made small with a proper choice of the feedback K.
As a second step we apply a state feedback $u = -H\hat{x}$ from the estimated state of G_2, obtaining

$$\begin{bmatrix} \dot{\hat{x}} \\ \hat{z} \end{bmatrix} = G_{2H} \cdot \begin{bmatrix} \hat{x} \\ \hat{e}_y \end{bmatrix} = \left[\begin{array}{c|c} A - B_2 H & K \\ \hline C_1 - D_{12} H & 0 \end{array}\right] \cdot \begin{bmatrix} \hat{x} \\ \hat{e}_y \end{bmatrix}. \tag{4.61}$$

The interconnection of (4.59) e (4.61) carries to the block diagram of figure 4.18

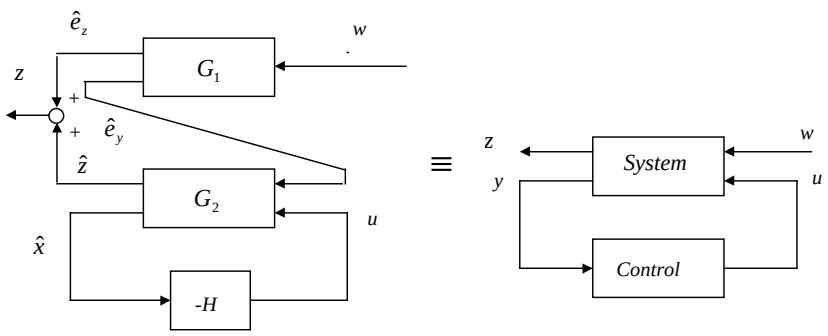

Fig. 4.18 Decomposition of the closed loop system in observer-control

The control filter obtained integrating the model G_2 with the state feedback is

$$u = \left[\begin{array}{c|c} A - B_2 H - KC_2 & K \\ \hline -H & 0 \end{array}\right] \cdot y \cdot \tag{4.62}$$

In the figure G_1 is asymptotically stable by construction of the observer, moreover the state feedback of G_2 can be, equally, stable with a proper choice of the matrix *H*. It is sufficient that the pair (A, B_2) is stabilisable (eq. (4.61)), and the condition doesn't depend on the choice of the observer.
The cascade interconnection of the two subsystem is, therefore, asymptotically stable and represents the final closed loop operator disturbances-objectives.

$$z = \left[\begin{array}{cc|c} A - B_2 H & KC_2 & KD_{21} \\ 0 & A - KC_2 & B_1 - KD_{21} \\ \hline C_1 - D_{12} H & C_1 & 0 \end{array}\right] \cdot w \tag{4.63}$$

Separation between observer and control is evident from the form block triangular of the coefficient matrix of the closed loop system (poles of the closed loop are the union of the poles of the observer, and the pole of the state feedback).

Note 4.4 Black box model

We note that the model G_2 proposes a state feedback control problem by itself, where disturbances and objectives ($\hat{e}_y$, $\hat{z}$) are measures reconstruction errors and objective estimate, respectively. We will discover that performances of the control of G_2 evaluated by its closed loop error operator (4.61) is representative, and in a certain sense equivalent for the design, of the performances obtained in

the real process by the control, given by (4.63). For this reason we have defined G_2 as the *black box model* of the process and its uncertainty in chapter 1.

Example 4.6 The sensitivity function

We already know that the closed loop sensitivity function establishes the relationship between output disturbances and controlled output. We establish the result using an extended system. The process is given by

$$y = \left[\begin{array}{c|c} A & B \\ \hline C & 0 \end{array}\right] \cdot u \tag{4.64}$$

we add output disturbances; the control is obtained using a feedback on the estimated states.
The extended system is the following

$$\begin{bmatrix} \dot{x} \\ z \\ y \end{bmatrix} = \left[\begin{array}{c|cc} A & 0 & B \\ \hline C & I & 0 \\ C & I & 0 \end{array}\right] \cdot \begin{bmatrix} x \\ w \\ u \end{bmatrix} \tag{4.65}$$

Objectives are the system outputs where the disturbance w is present. Let note that for the first time the extended system shows $D_{11} \neq 0$. The closed loop system, i.e. the sensitivity operator, is given by (4.75) that in this case assumes the form

$$z = \left[\begin{array}{cc|c} A-BH & KC & K \\ 0 & A-KC & -K \\ \hline C & C & I \end{array}\right] \cdot w \tag{4.66}$$

The closed loop operator is invertible, hence the system is proper; the closed loop poles are those of the state feedback and of the observer. The inverse operator is the loop return operator which poles are those of the open loop

$$w = \left[\begin{array}{cc|c} A-BH-KC & 0 & K \\ KC & A & -K \\ \hline -C & -C & I \end{array}\right] \cdot z \tag{4.67}$$

Exercise 4.5 A control problem from output measures

Consider the following model and reduce the effect of disturbances on the objective z using measurements y

$$\begin{bmatrix} \dot{x} \\ z \\ y \end{bmatrix} = \left[\begin{array}{cc|ccc} 0 & 1 & 0 & 0 & 0 \\ -1 & 0.02 & 1 & 0 & 1 \\ \hline 1 & 0 & 0 & 0 & 1 \\ 1 & 0 & 0 & 1 & 0 \end{array}\right] \cdot \begin{bmatrix} x \\ \begin{bmatrix} w_1 \\ w_2 \end{bmatrix} \\ u \end{bmatrix} \tag{4.68}$$

w_1 is a disturbance on the input and w_2 is a noise on the measures.
Try to build the observer and the state feedback minimizing the respective gramians resulting from the two separate problems.
Solution
Apply the proposed techniques to the models (4.60) e (4.61).

State feedback – State estimation

We present now a dual development with respect to the previous section.
The starting point is the state feedback (4.33) as the system state were available. However, as the system states are not available, we use an estimate of the feedback signal to close the loop

$$u = -\hat{y}_r = -H\hat{x} = -Hx + \hat{e}_{y_r}, \quad \hat{e}_{y_r} = H\hat{e}, \quad \hat{e} = x - \hat{x} \tag{4.69}$$

where H is selected feedback matrix assuming to measure system states and $\hat{e}_{y_r}$ is the error incurred in using an estimate.
If we apply this control to the system we can decomposed the closed loop as the tandem interconnection of two subsystems, as shown in figure 4.19, where the first one is certainly stable because of the choice of the feedback

$$z = \overline{G}_1 \cdot \begin{bmatrix} w \\ \hat{e}_{y_r} \end{bmatrix} = \left[\begin{array}{c|cc} A - B_2 H & B_1 & B_2 \\ \hline C_1 - D_{12} H & 0 & D_{12} \end{array}\right] \cdot \begin{bmatrix} w \\ \hat{e}_{y_r} \end{bmatrix} \tag{4.70}$$

and the second, given by

$$\begin{bmatrix} \hat{e}_{y_r} \\ y \end{bmatrix} = \overline{G}_2 \cdot \begin{bmatrix} w \\ u \end{bmatrix} = \left[\begin{array}{c|cc} A & B_1 & B_2 \\ \hline H & 0 & I \\ C_2 & D_{21} & 0 \end{array}\right] \cdot \begin{bmatrix} w \\ u \end{bmatrix}, \tag{4.71}$$

implies the solution of an output estimation problem with solution (4.51). With a proper control the subsystem $\overline{G}_2$ can be made stable, as well, and the control designed for $\overline{G}_2$ is exactly the final control for our plant.

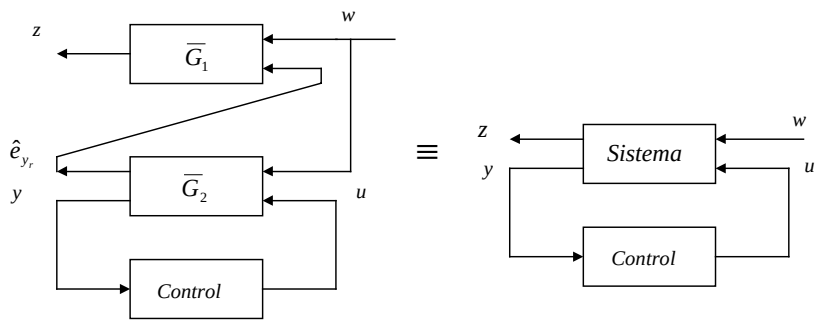

Fig. 4.19 Decomposition control-observer – the dual case

The output feedback can be reduced to a problem of output estimation in the form of $\overline{G}_2$ in (4.71).
It is interesting to note that the objective in $\overline{G}_2$ is the estimation error $\hat{e}_{y_r}$ of the feedback signal that ideally will be obtained by a state feedback of the system. The problem has been considered in section 4.5.1, and it is solved with an output observer

$$\begin{bmatrix} \dot{\hat{x}} \\ u \\ \hat{y} \end{bmatrix} = \left[\begin{array}{c|cc} A & K & B_2 \\ \hline -H & 0 & 0 \\ C_2 & 0 & 0 \end{array}\right] \cdot \begin{bmatrix} \hat{x} \\ y-\hat{y} \\ u \end{bmatrix} \tag{4.72}$$

Stability of the estimation error of $\overline{G}_2$ guarantees the stability of the whole closed control, as it appears in figure 4.19.
The resulting control filter is

$$u = \left[\begin{array}{c|c} A - B_2H - KC_2 & K \\ \hline -H & 0 \end{array}\right] \cdot y \cdot \tag{4.73}$$

The relationship between disturbance w and estimation error $\hat{e}_{y_r}$ is

$$\hat{e}_{y_r} = \left[\begin{array}{c|c} A - KC_2 & B_1 - KD_{21} \\ \hline H & 0 \end{array}\right] \cdot w, \tag{4.74}$$

The final closed loop disturbance-objective obtained by interconnecting (4.74) and (4.70), is

$$z = \left[\begin{array}{cc|c} A - B_2H & B_2H & B_1 \\ 0 & A - KC_2 & B_1 - KD_{21} \\ \hline C_1 - D_{12}H & D_{12}H & 0 \end{array}\right] \cdot w \tag{4.75}$$

It is not surprising that by duality the controllers, and the closed loop objective operators (a state space transformation links (4.63) to (4.75)) are identical. Equally by dually we find the black box model of the previous section.

Example 4.7 Relationship between reference and output

The plant is the same of the previous example.
Let us assume that the control contains the external reference signal *r*, obviously known

$$u = r - y_r = r - H\hat{x}$$

The extended system is the following

$$\begin{bmatrix} \dot{x} \\ z \\ \begin{bmatrix} r \\ y \end{bmatrix} \end{bmatrix} = \left[\begin{array}{c|cc} A & B & B \\ \hline C & -I & 0 \\ \begin{bmatrix} 0 \\ C \end{bmatrix} & \begin{bmatrix} I \\ 0 \end{bmatrix} & 0 \end{array}\right] \cdot \begin{bmatrix} x \\ r \\ -y_r \end{bmatrix} \tag{4.76}$$

with the objective, $z = Cx - r$, to minimize the error between reference and output. Measurements contain separately output and reference.
We want to determine the closed loop reference output relationship
We can represent the observer feedback as

$$K = \begin{bmatrix} K_r & K_y \end{bmatrix} \tag{4.77}$$

The closed loop operator (4.75) assumes the following form

$$z = \left[\begin{array}{cc|c} A - BH & BH & B \\ 0 & A - K_y C & B - K_r \\ \hline C & 0 & 0 \end{array}\right] \cdot r \tag{4.78}$$

Let note that K_y is selected, as usual to characterize the observer dynamics, while with $K_r = B$ the observer becomes uncontrollable from the reference and the closed loop behavior is the one with state feedback.

Internal stability

In a previous section internal stability was analyzed using cascade compensation, here the study is repeated with an observer based feedback.
The block diagram of the control is shown in figure 4.20, similar to 4.5. We ignore here *r*, and we consider, as external signals w_1 e w_2, with outputs the signals u' e y.

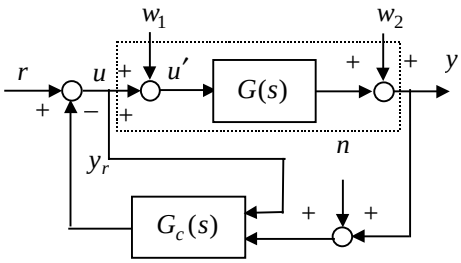

Fig. 4.20 Output feedback control with a control structure based on the observer

The extended system needed to represent the different input-output relationships is the following

$$\begin{bmatrix} y \\ u' \\ y \end{bmatrix} = \left[\begin{array}{c|cc} A & [0 \quad B] & B \\ \hline \begin{bmatrix} C \\ 0 \end{bmatrix} & \begin{bmatrix} I & 0 \\ 0 & I \end{bmatrix} & \begin{bmatrix} 0 \\ I \end{bmatrix} \\ C & [I \quad 0] & 0 \end{array}\right] \cdot \begin{bmatrix} w_2 \\ w_1 \\ -y_r \end{bmatrix} \tag{4.79}$$

The closed loop operator linking the signals of interest is

$$\begin{bmatrix} y \\ u' \end{bmatrix} = \left[\begin{array}{cc|c} A-BH & BH & [0 \quad B] \\ 0 & A-KC & [-K \quad B] \\ \hline \begin{bmatrix} C \\ -H \end{bmatrix} & \begin{bmatrix} 0 \\ H \end{bmatrix} & \begin{bmatrix} I & 0 \\ 0 & I \end{bmatrix} \end{array}\right] \cdot \begin{bmatrix} w_2 \\ w_1 \end{bmatrix} \tag{4.80}$$

Definition 4.3 Internal stability in the presence of state observer

An observer based state feedback control is internally stable if both $A-BH$ and $A-KC$ represent stable dynamics. Therefore, necessary and sufficient condition are that the pairs (A,B) and (A,C) are stabilisable and detectable, respectively.

A family of controls guaranteeing internal stability

Let consider the state estimator (4.72) for the model (4.71), and observe that the choice $u=-H\hat{x}$ is not unique to guarantee the internal stability of the closed loop.
In fact, let extend the class of controls, assuming a new structure of the type

$$u = -H\hat{x} + Q \cdot \hat{e}_y = -H\hat{x} + Q \cdot \left(C_2\hat{e} + D_{21}w\right) \tag{4.81}$$

where Q is any proper and asymptotically stable operator.
The block diagram showing the new control structure is contained in the following figure

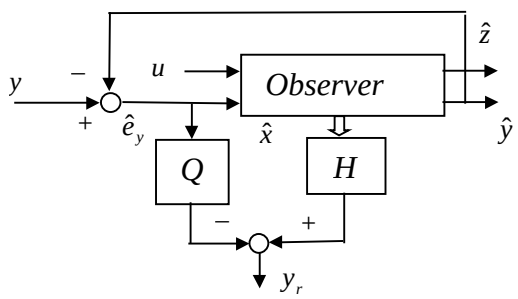

Fig. 4.21 Family of controls guaranteeing internal stability

Substitute (4.81) in (4.72) and derive the relationship between disturbance w and control perturbation $\tilde{u}$ introduced by this new control structure

$$\begin{bmatrix} H\hat{e} \\ \hat{e}_y \end{bmatrix} = G_3 \cdot w = \left[\begin{array}{c|c} A - KC_2 & B_1 - KD_{21} \\ \hline H & 0 \\ C_2 & D_{21} \end{array}\right] \cdot w, \tag{4.82}$$

$$\tilde{u} = H\hat{e} + Q \cdot \hat{e}_y$$

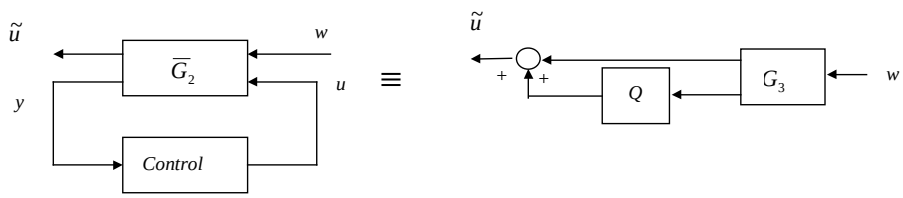

Fig. 4.22 Relationship *w-u*

In this situation $\tilde{u}$ substitutes $\hat{e}_{y_r}$ in the block diagram of figure 4.19. This result shows that starting from an observer-state feedback that guarantee internal stability a whole family of new control systems can be built by changing Q, that still guarantee internal

stability. It is interesting to note that it has been proven that this family encompasses all possible controllers with this property.

4.6 Diophantine equation

In this last section we show how to solve a diophantine equation.
Let assume to assign the closed loop characteristic polynomial $d_{cc}(s)$ to the control of the plant $G(s)=\dfrac{n(s)}{d(s)}$ with a proper cascade compensation filter $G_c(s)=\dfrac{n_c(s)}{d_c(s)}$, having assigned order for the numerator and denominator polynomials.
The closed loop characteristic polynomial can be written as

$$1+G_a=1+\frac{n_c\cdot n}{d_c\cdot d}=\frac{d_{cc}}{d_c\cdot d}$$

$$d_c\cdot d+n_c\cdot n=d_{cc}$$

$$n_c \quad n \quad m_c \quad m \quad n_c+n$$

$$d(s)=s^n+a_{n-1}\cdot s^{n-1}+\cdots+a_0$$

$$d_c(s)=s^{n_c}+x_1\cdot s^{n_c-1}+\cdots+x_{n_c}$$

$$n_c(s)=y_1\cdot s^{m_c}+y_2\cdot s^{m_c-1}+\cdots+y_{m_c+1}$$

$$n(s)=b_m\cdot s^m+b_{m-1}\cdot s^{m-1}+\cdots+b_0$$

$$d_{cc}(s)=s^{n+n_c}+a_{cc_{n+n_c-1}}\cdot s^{n+n_c-1}+\cdots+a_{cc_0}$$

In order to determine the unknown coefficients of the compensator we write the following system of linear equations. The coefficient matrix depends on the plant parameters and the right hand side from the selected closed loop characteristic polynomial.

$$\begin{array}{c|cccccc|c|c|c|}
n+n_c-1 & a_{n-1} & 1 & & & & & 1 & & a_{cc_{n+n_c-1}} \\
 & a_{n-2} & a_{n-1} & \cdot & & & & x_1 & & \\
 & \cdot & a_{n-2} & & 1 & & & \cdot & & \\
m+m_c & \cdot & \cdot & & & b_m & & x_{n_c} & & \\
 & a_0 & \cdot & & & \cdot & \cdot & y_1 & = & \\
 & & a_0 & & & b_0 & b_m & \cdot & & \\
 & & & \cdot & & & \cdot & \cdot & y_{m_c+1} & \\
0 & & & & a_0 & & & b_0 & & a_{cc_0} \\
\hline
\text{gain} & & & & \mathrm{k_r}\cdot a_r & & & -b_0 & & 0
\end{array}$$

The coefficient matrix is nonsingular if the plant numerator and denominator do not have common factors.

If we want to impose a constraint to the stationary loop gain we can add a further equation.
The number of equations and unknowns, with a constraint on the gain are the following:

$$\text{equation number}: \; n + n_c + 1$$

$$\text{unknown number}: \; m_c + 1 + n_c$$

To guarantee a solution using a proper filter we need $n_C = n$ if the gain is assigned, otherwise it is sufficient $m_C = n_C = n - 1$.
If the unknowns number is less than the number of equations, $n - m_C$ closed loop poles cannot be assigned. In this case the problem can be restate, calling $z(s)$ the $n - m_C$ order polynomial representing the unassigned poles, and inserting the coefficients of this polynomial as unknowns.

$$\text{If} \quad n + n_c + 1 > m_c + n_c + 1 \qquad n - m_c > 0$$

$$d_{cc}(s) = \bar{d}_{cc}(s) \cdot z(s)$$

$$n + n_c[n_c - m_c][n - m_c]$$

$$\bar{d}_{cc}(s) = s^{n_c - m_c} + \bar{a}_{cc_{n_c - m_c - 1}} \cdot s^{n_c - m_c - 1} + \cdots + \bar{a}_{cc_0}$$

$$z(s) = s^{n - m_c} + z_1 \cdot s^{n - m_c - 1} + \cdots + z_{n - m_c}$$

$$\begin{array}{c|cccccccc|c|c|}
n + n_c - 1 & 1 & & & & & -1 & & x_1 & & \bar{a}_{cc_{n_c - m_c - 1}} - a_{n-1} \\
 & a_{n-1} & \cdot & & & & -\bar{a}_{cc_{n_c - m_c - 1}} & & \cdot & & \\
 & a_{n-2} & a_{n-1} & 1 & & & & -1 & x_{n_c} & & \cdot - a_0 \\
m + m_c & \cdot & \cdot & \cdot & b_m & & & -\bar{a}_{cc_{n_c - m_c - 1}} & y_1 & & \\
 & & \cdot & & & & \cdot & & \cdot & = & \bar{a}_{cc_0} \\
 & a_0 & & & b_0 & b_m & -\bar{a}_{cc_0} & \cdot & y_{m_c + 1} & & 0 \\
 & & a_0 & \cdot & & & & \cdot & z_1 & & \cdot \\
0 & & & a_0 & & b_0 & & -\bar{a}_{cc_0} & z_{n - m_c} & & 0 \\
\hline
\text{gain} & & & k_r \cdot a_r & & -b_0 & & & & & 0
\end{array}$$

4.7 Bibliography

[1] M. Horowitz. “Synthesis of Feedback Systems” Academic Press, New York, 1963
[2] T. Kailath. “Linear systems” Prentice Hall, Englewood Cliff, N. J., 1980
[3] P. Colaneri, J. C. Geromel, A. Locatelli, “Control Theory and Design: an H infinite approach” Academic Press, S. Diego, 1997.
[4] P. Dorato. “Analytic Feedback System Design: An Interpolation Approach” Brooks/Cole Publishing Company, 2000