Chapter 1

THE PROCESS, THE MODEL, THE CONTROL

This chapter reviews the formalisms to model dynamic systems and introduces the problem of automatic control. As the control is designed and its performances a priory evaluated based on a model, the unavoidable approximations between model and process, usually called *uncertainties*, are discussed.
This book consider the design of the control based on linear, time invariant, finite dimensional models, i.e. models represented in the time domain by a finite order system of ordinary differential equations, the *state variable representation*, or in the frequency domain by rational *transfer functions*. As we will consider jointly continuous as well as sampled data systems, informal techniques will be given already from the beginning to relate approximately the two visions of the system, leaving to a specific chapter to formalize the problem of sampling.

1.1 The model of a dynamic system

Let us consider the problem to regulate[1] the temperature inside a closed environment by using an electrical heater. The model is constituted by the volume of air of the environment, characterized by a thermal capacity, the environment is limited by peripheral walls with a certain degree of thermal conductivity, as represented in figure 1.1.

[1] It means to maintain a physical variable of the system to a constant selected value using the control

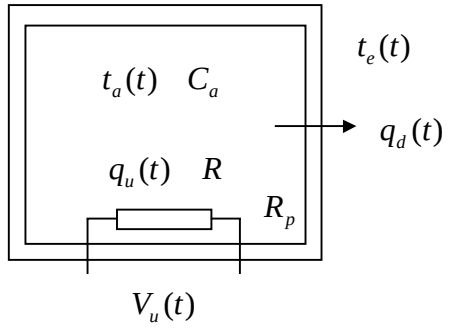

Fig. 1.1 A thermal dynamic system

The equations giving the evolution in time of the air temperature, and the quantity of heat exchanged through the walls are:

$$t_a(t) = t_a(0) + \frac{1}{C_a} \int_0^t q_u(\tau) - q_d(\tau) d\tau$$

$$q_d(t) = \frac{1}{R_p}(t_a(t) - t_e(t))$$

From them the corresponding state variable representation is:

$$\begin{aligned} \dot{x}(t) &= -\frac{1}{C_a R_p} x(t) + \frac{1}{C_a} u(t) + \frac{1}{C_a R_p} d(t) \\ y(t) &= x(t) \end{aligned} \tag{1.1}$$

where:

$t_a = y$ is the air temperature, state and output of the system,

$q_u = u$ is the quantity of heat dissipated by the heater representing the control,

$t_e = d$ is the temperature of the external environment that may change in unpredictable manner considered as a disturbance.

The system representation is in no way unique. A more realistic model of the previous process assumes that the walls, as well, have a thermal capacity and the exchange of heat is through the two internal and external wall surfaces.

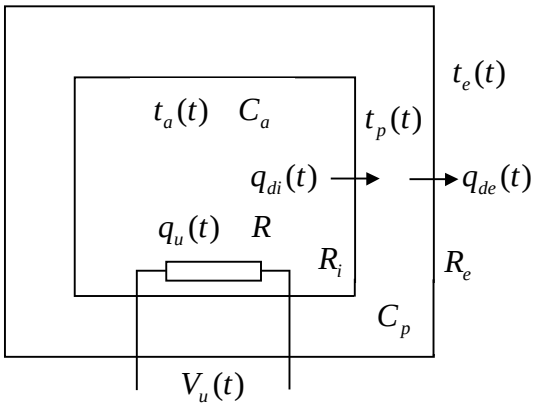

Fig. 1.2 Thermal dynamic system - 2

The equations, with this new assumption, become:

$$t_a(t) = t_a(0) + \frac{1}{C_a}\int_0^t q_u(\tau) - q_{di}(\tau)d\tau$$

$$q_{di}(t) = \frac{1}{R_i}(t_a(t) - t_p(t))$$

$$t_p(t) = t_p(0) + \frac{1}{C_p}\int_0^t q_{di}(\tau) - q_{de}(\tau)d\tau$$

$$q_{de}(t) = \frac{1}{R_e}(t_p(t) - t_e(t))$$

A second state representation, more accurate than the (1.1), is given by:

$$\begin{vmatrix} \dot{x}_1(t) \\ \dot{x}_2(t) \end{vmatrix} = \begin{bmatrix} -\frac{1}{C_a R_i} & \frac{1}{C_a R_i} \\ \frac{1}{C_p R_i} & -\frac{R_i + R_e}{C_p R_i R_e} \end{bmatrix} \cdot \begin{vmatrix} x_1(t) \\ x_2(t) \end{vmatrix} + \begin{bmatrix} \frac{1}{C_a} \\ 0 \end{bmatrix} u(t) + \begin{bmatrix} 0 \\ \frac{1}{C_p R_e} \end{bmatrix} d(t) \qquad (1.2)$$

$$y(t) = \begin{bmatrix} 1 & 0 \end{bmatrix} \begin{vmatrix} x_1(t) \\ x_2(t) \end{vmatrix}$$

with state variables:
$x_1 = t_a$ the air temperature and $x_2 = t_p$ the temperature inside the walls.

This process of growing complexity may be carried on further. Sometime a better approximation is really necessary to improve the performances. In many cases, however, the well know parsimony of engineering asks for simplified models where the approxi-

mation resulting is in some way taken into account in the design, how better explained next.
If we want to consider that the heat transferred to the environment air is obtained by the current flowing through a thermal resistor the control variable is properly the voltage $v_u(t)$ applied to the resistor, with a dissipated power given by:

$$q_u(t) = \frac{1}{R} v_u{}^2(t) \tag{1.3}$$

where R is the value of the resistor of the heater.
The system input is now $v_u(t)$, instead of directly $q_u(t)$, and the model becomes *non-linear*.
Techniques to design non-linear control are available. However, in most cases a linear control will fit the needs, as when the thermal system will maintain approximately a constant temperature, and the variables will experiment small variations in the neighbors of nominal values. In these cases equation (1.3) can be approximated by linearizing it around the nominal values and substituted by

$$q_u(t) = \frac{1}{R} v_{u0}{}^2 + 2\frac{1}{R} v_{u0}\Delta_{v_u}(t), \tag{1.4}$$

where the control input is $\Delta_{v_u}(t)$.
This techniques to move from a non-linear model to a linear one is called *linearization*.
Finally, the parameters present in the model, C_a, C_p, R_i, R_e, assume values approximately known or varying in time.
Previous observation put in evidence that doesn't exist the model of a given system, but, instead, several models, with different degree of approximation and complexity, with different values of their parameters can be used interchangeably to represent a given reality.

1.2 Block diagrams

Dealing with linear models, eventually obtained by linearized approximations of non-linear systems of finite dimension, it is customary to represent graphically the equations of the model using *block diagrams*, where blocks represent *input-output functional operators*, and the arcs connecting blocks represent *signals*[2] that, applied to the input of one block, are transformed into output signals. In the past these block diagrams where commonly used to represent operators and signals in the transform domain (frequency). In this realm input-output dynamic relationships are simply algebraic ones so it is possible to carry on the block diagram an algebraic computation to determine the equivalent transfer function of complex graphs of interconnected blocks. This technique is known as *block diagram algebra*. A recent re-edition of a classical text based on this approach

[2] A signal is simply a function of time

is [1], (see also [2]). A paragraph at the end of this chapter offers the essential elements, very simple and almost intuitive to perform block diagram algebra.
An example of application of block diagram algebra is given in the following of this section.
The block diagram of the first model of the thermal system with equations (1.1) can be represented as:

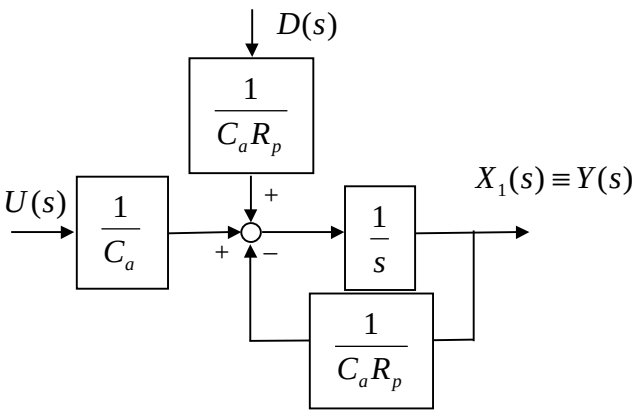

Fig. 1.3 Block diagram

Where $\frac{1}{s}$ is the Laplace transform of an integrator in time.
With a proper transformation it becomes:

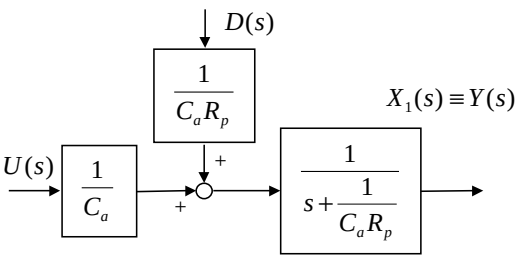

Fig. 1.4 Block diagram after a transformation

The second model of the process with equation (1.2) is represented by the next diagram:

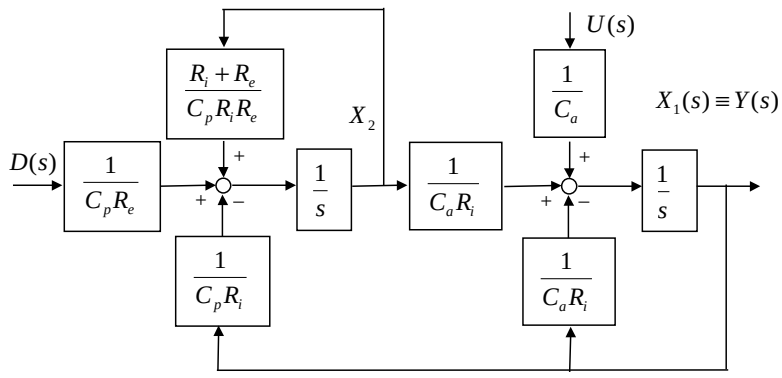

Fig. 1.5 More complex model of the thermal system

With a first transformation it becomes:

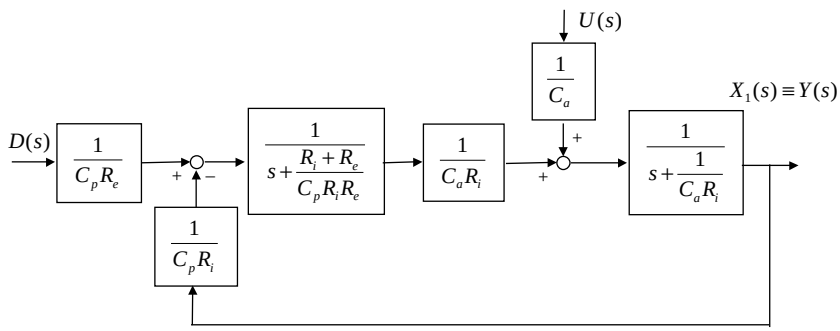

Fig. 1.6 Processing the model

And with a second transformation it assumes the final form:

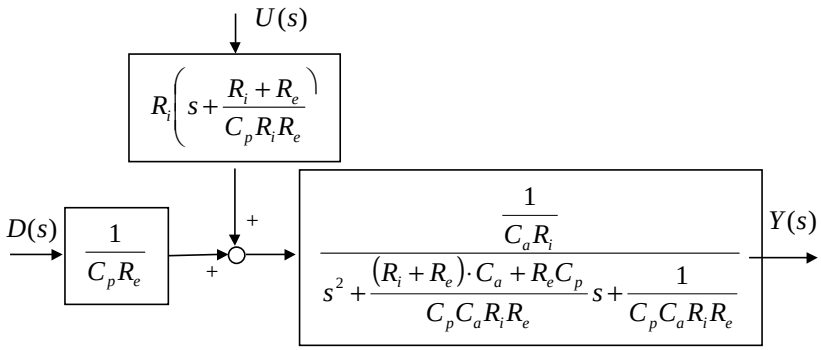

Fig. 1.7 Final block diagram of the thermal system

1.3 Discrete time dynamic systems

Today almost all dynamic systems are controlled digitally by computers, *input* and *output signals* of the process, usually a continuous system, can be processed by the controller only at discrete intervals of time, we call this a *sampled data control system*. A deeper treatment of sampled data control systems and of the relationship between *continuous process* and digital control is delayed until chapter 2. Here we offer an introductory development where discrete time systems are seen as an alternative reality which emulates approximately the behavior of the continuous systems they represent.

1.3.1 Approximating the derivative in time

Let us consider the simpler of the two thermal control systems of the previous sections, instead of continuous time signals, we assume to take periodically samples from them and we substitute empirically in the block diagrams to the operators of integration in time the operators of sum of samples. This approximation can be reasonable if the *sampling period*, the interval of time between to consecutive samples, is small. Called Δ the sampling period, a discrete time model approximating the continuous process is given by the next block diagram:

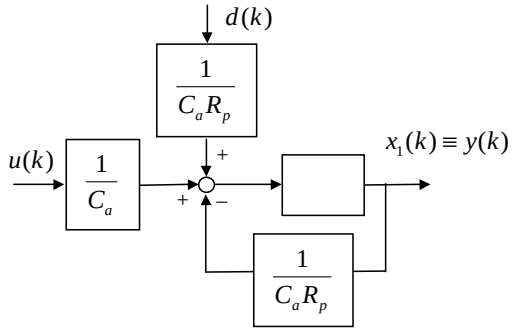

Fig. 1.8 Approximating the integrator in a sampled data system

Where the arcs represent the samples of the signals and Σ the sum operator of the input samples multiplied by Δ up to the current time.
Let note that this model is obtained by substituting the derivative present in the equations of the process with their first order finite difference approximation.

$$\dot{x}(t) = -\frac{1}{C_a R_p} x(t) + \frac{1}{C_a} u(t) + \frac{1}{C_a R_p} d(t)$$

$$\frac{x(t+\Delta) - x(t)}{\Delta} \cong -\frac{1}{C_a R_p} x(t) + \frac{1}{C_a} u(t) + \frac{1}{C_a R_p} d(t)$$

It results in the following difference equation

$$x(k+1) = a \cdot x(k) + b_u \cdot u(k) + b_d \cdot d(k)$$

$$y(k) = x(k)$$

$$a = 1 - \frac{1}{C_a R_p} \Delta$$

$$b_u = \frac{1}{C_a} \Delta$$

$$b_d = \frac{1}{C_a R_p} \Delta$$

A similar model for the more complex system is the following:

$$\begin{vmatrix} x_1(k+1) \\ x_2(k+1) \end{vmatrix} = \left(I + \begin{bmatrix} -\dfrac{1}{C_a R_i} & \dfrac{1}{C_a R_i} \\ \dfrac{1}{C_p R_i} & -\dfrac{R_i + R_e}{C_p R_i R_e} \end{bmatrix} \Delta \right) \cdot \begin{vmatrix} x_1(k) \\ x_2(k) \end{vmatrix} + \begin{bmatrix} \dfrac{1}{C_a R_i} \\ 0 \end{bmatrix} \Delta \cdot u(k) + \begin{bmatrix} 0 \\ \dfrac{1}{C_p R_e} \end{bmatrix} \Delta \cdot d(k)$$

$$y(k) = \begin{bmatrix} 1 & 0 \end{bmatrix} \cdot \begin{vmatrix} x_1(k) \\ x_2(k) \end{vmatrix}$$

Let note that with this approximation all block diagrams in the continuous case remain formally unchanged, with the only substitution of the operator of sum of samples with the operator of integral in time.
It is easy to compare the eigenvalues of the coefficient matrices, the zeroes and poles of the *transfer functions* of the system in the two cases. In fact, as we will see at the end of this chapter the substitution of the integral operator involves the transformation $s \Leftrightarrow \dfrac{z-1}{\Delta}$, in turn this introduces the following relationship between roots in the continuous and discrete cases: $1 + \Delta \cdot \lambda_i \Leftrightarrow \overline{\lambda}_i$
These results are the consequence of the approximation of the derivative, and can be in certain cases unsatisfactory. Let compare these results with the precise treatment of the problem given in chapter 2.
We suggest to verify continuous and discrete time models of the previous examples with the following values of the parameters

$$C_a = 10[kCal/\ C]$$
$$R_p = 100[\ C \cdot s / kCal]$$
$$R_i = 50[\ C \cdot s / kCal]$$
$$R_e = 50[\ C \cdot s / kCal]$$
$$C_p = 5[kCal/\ C]$$
$$\Delta = 10[s]$$

1.4 Block diagram and state variable representations

Block diagram algebra was meaningful when the analysis of a dynamic system was carried on with paper and pencil. The availability of software environments on computer makes it obsolete today. Block diagram continue, however, to be irreplaceable tools of representation with the objective to deliver automatically the equivalent state variable representation of complex systems resulting from the interconnection of smaller components. An example is represented by the developing environment G++ which supports this book.

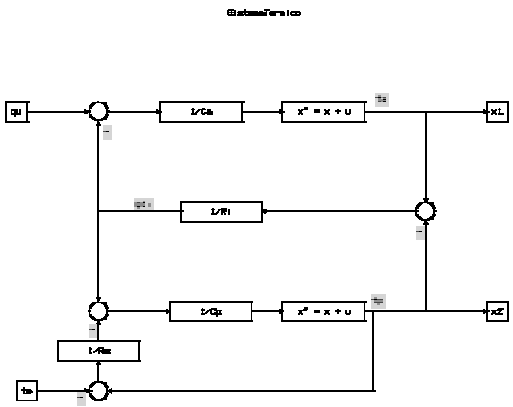

Fig. 1.9 Block diagram of the thermal system with a graphical editor G++

Exactly the same diagram offers in approximate fashion the sampled data model obtained by substituting the integrator operator

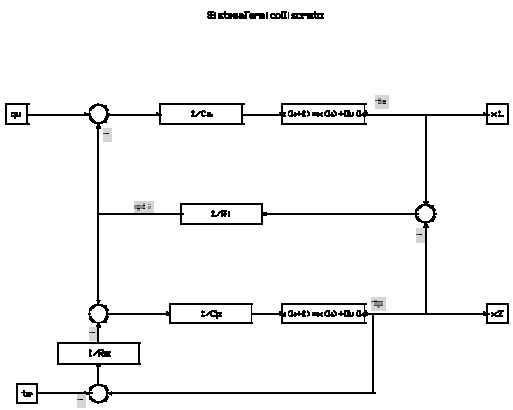

Fig. 1.10 Block diagram of the sampled data model of the thermal system

1.5 Relationship between process and model

The physical process is never perfectly known. Even if it were, there are aspects of its dynamics that are useless for designing the control, moreover signals enter on the process, outside our control and often unknown, which influence dynamics and outputs. A model that simplifies the behavior of the process is needed to design a control. This must, however, maintains some information on disturbances and approximations, as well as limiting bound must be assessed, how is a standard practice in engineering. Then, the relationship between process and model and the selected design approach must guarantee that performances achieved on the model will be maintained (guaranteed) when the control will be transferred to the real process. For this, we propose two alternative point of view to represent uncertainties on the process, that we will indicate conventionally as *transparent box model* and *black box model*.

1.5.1 Transparent box model

In the first representation we assume to know, if not the values, at least the internal structure of the process, and hence the origin of the uncertainty responsible for the differences that, with identical input, we will experience on the outputs, respectively, of the process and of the model. Classically the sources of uncertainty are distinguished between *parametric disturbances* (i.e. not precisely known parameter values, values changing in time in an unknown manner, linearizations or ignored whole dynamic components), and *additive disturbances* (signals adding to the control as input of the system dynamics outside the reach of the controller and the designer).
Based on the a priori knowledge of the system the differences experienced between system and model outputs with same control are explained by the ignorance of such a disturbances. Process and model are, therefore, put in relationship each other as represented in the following picture:

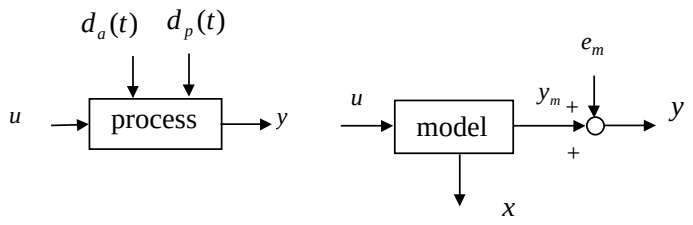

Fig. 1.11 Transparent box representation

Because of the linearity of the adopted model (the process may be non-linear) uncertainties can be translated, as in the figure, at the end of the model. The nominal model in a state variable representation is given by the following matrix equation:

$$\dot{x}(t) = A \cdot x(t) + B \cdot u(t)$$
$$y_m(t) = C \cdot x(t)$$

A direct link between inputs and outputs will be always absent in representing a physical process, the model is said strictly proper. The *error signal* between system and model taking into account all sources of uncertainties, approximations and external disturbances is consequently defined as:

$$y(t) - y_m(t) = e_m(t)\,.$$

This signal is made explicit, at least approximately, in a few case of interest in the last part of this section.

Model uncertainty and external disturbances in the dynamics of a process

Parametric uncertainty means that system and model will not have the same dynamics. Added to this external disturbances are present on the input of the dynamics or on the output. If we indicate with G_p, G, respectively, process and model operators, and with Δ_m the *difference dynamics operator* describing approximations and uncertainties we obtain the following relationships

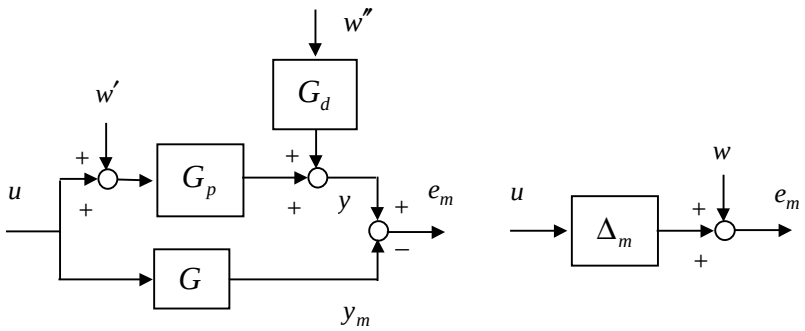

Fig. 1.12 Model errors and disturbances on the process

with

$$w = G_p w' + G_d w''\,.$$

Without external disturbances we have simply $e_m = \Delta_m \cdot u$.

If we want to indicate additive disturbances, referring them to the output without any specific requirements, we will say $e_m = w$, if disturbances are applied to the input of the process $e_m = G_p \cdot w'$, or if we want to show that the output disturbances have their own

dynamics $e_m = G_d \cdot w''$. In general if we assume both additive and multiplicative disturbances we have

$$e_m = \Delta_m \cdot u + w \tag{1.5}$$

Extended system

For control design, along with the description of the input-output model of the process, encompassing external disturbances and uncertainties it is necessary to introduce a certain number of requirements that the control must satisfy. Typical examples of requirements are: reducing or zeroing effects of external disturbances on the controlled output, maintaining the tracking error of the output with respect to a *reference signal*[3] between acceptable bounds, guarantee that the stability imposed by the control to the nominal model by the design is satisfied for any discrepancy between process and model in the specified region of uncertainty.
In the first case one says that *performances* are satisfied, in the second that *robust stability* is guaranteed by the control.
In classical control theory all previous specification were represented, as it will be shortly seen, by the closed loop sensitivity function with its ability to show how effects of disturbances where reduced in the closed loop system. Hence, an elegant way to state a control problem is to reformulate requirements by introducing proper system signals and setting for them limits of the desired sensitivity with respect disturbances in closed loop. This will allow to integrate in a unique representation nominal model, uncertainty and disturbance description and performances desired by the control. This point of view is formalized introducing a dynamical model with four port constituted by two groups of inputs, and two groups of outputs, indicated in the literature as *extended system* of the control problem. The first group of inputs *w* represents external disturbances, or in general disturbances due to the uncertainty present on the process, the second group *u* are the controls; the first group of outputs *z*, indicated as *objectives*, indicate signals carrying requirements to be satisfied by the control, the second group of outputs *y* are, instead, measurements available for the control. These are the outputs of the process used for feedback or external disturbances that may be eventually measured, such as the external temperature in a thermal control system.

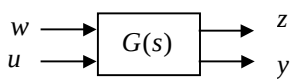

Fig. 1.13 Extended system

[3] The reference signal represent the profile that we want the controlled output variable follows in time

If we assume to apply a control, based on the measurements, to 1.13, achievement of requirements is evaluated through the sensitivity function that establish itself in closed loop between *w* e *z*.
In state variable form the extended system is conventionally represented by the following quadruple of matrices

$$\begin{bmatrix} \dot{x} \\ z \\ y \end{bmatrix} = \left|\begin{array}{c|cc} A & B_1 & B_2 \\ \hline C_1 & D_{11} & D_{12} \\ C_2 & D_{21} & 0 \end{array}\right| \cdot \begin{bmatrix} x \\ w \\ u \end{bmatrix} \tag{1.6}$$

This quadruple will be alternatively used, with respect to the transfer functions, to represent input-output dynamic operators with a short hand notation of the type:

$$\begin{bmatrix} z \\ y \end{bmatrix} = \begin{bmatrix} G_{11} & G_{12} \\ G_{21} & G_{22} \end{bmatrix} \cdot \begin{bmatrix} w \\ u \end{bmatrix} \rightarrow \begin{bmatrix} z \\ y \end{bmatrix} = \left[\begin{array}{c|cc} A & B_1 & B_2 \\ \hline C_1 & D_{11} & D_{12} \\ C_2 & D_{21} & 0 \end{array}\right] \cdot \begin{bmatrix} w \\ u \end{bmatrix}. \tag{1.7}$$

In this representation we assume that the coefficient matrix A will be completely *controllable* from the pair $\begin{bmatrix} B_1 & B_2 \end{bmatrix}$ and *observable* from the pair $\begin{bmatrix} C_1 \\ C_2 \end{bmatrix}$, but not necessarily from the only control input matrix B_2 and measurement output matrix C_2. We note that in (1.6) the subspace of A completely controllable/observable from B_2 e C_2 represents the nominal model of the process. Moreover, in (1.7), as the process is always strictly proper $D_{22} = 0$.
Some example of extended systems will be introduced at the end of this chapter.

1.5.2 Black box model

An alternative schema, more abstract than the previous one, to relate the process with its uncertainty and a model is obtained by ignoring the real internal structure of the process and the disturbances *w*, adopting, instead, to represent discrepancies between process and model the information a posteriori resulting from the differences between output measurements of process and model with identical control. This scheme can be obtained by implementing an *asymptotic state observer* from the measurable output of the process. Differences, approximations effects of unknown external disturbances are here represented by the measurement reconstruction error (fig. 1.14).
To understand the result, let us introduce a state observer of a system of which we assume to know the internal structure (1.6), and estimate the outputs *z* e *y*

$$\begin{bmatrix} \dot{\hat{x}} \\ \hat{z} \\ \hat{y} \end{bmatrix} = \left[\begin{array}{c|cc} A & K & B_2 \\ \hline C_1 & 0 & D_{12} \\ C_2 & 0 & 0 \end{array}\right] \cdot \begin{bmatrix} \hat{x} \\ \hat{e}_y \\ u \end{bmatrix} \tag{1.8}$$

We indicate with $\hat{e}_y = y - \hat{y}, \hat{e}_z = z - \hat{z}$ e $\hat{e}_x = x - \hat{x}$ reconstruction errors of the different signals of interest. The error model results from the difference between (1.6) e (1.8) and it is given by

$$\begin{bmatrix} \dot{\hat{e}}_x \\ \dot{\hat{e}}_z \\ \dot{\hat{e}}_y \end{bmatrix} = \left[\begin{array}{c|c} A - KC_2 & B_1 - KD_{21} \\ \hline C_1 & D_{11} \\ C_2 & D_{21} \end{array}\right] \cdot \begin{bmatrix} \hat{e}_x \\ w \end{bmatrix} \tag{1.9}$$

From (1.9) it is clear that for all values of the observer matrix K that guarantee $A - KC_2$ asymptotically stable, any bounded disturbance w in input originates error signals in output bounded, as well. The reconstruction error operator satisfies the property of (bounded input-bounded output) *BIBO*. Naturally, we will not be satisfied by simply BIBO observers, but we will look for specific solutions guaranteeing also small sensitivity of the objective errors $\hat{e}_z$ to disturbances. Moreover, we note that this error is independent from the control input.

In these conditions it is reasonable to imagine that the extended system (1.8), where the output reconstruction error $\hat{e}_y$ plays the role of unknown disturbances, $\hat{z}$ are the objectives and $\hat{x}$ the available measurements (in fact from the observer the estimated states are available) can be adopted as representation of the original process comprehensive of its uncertainties, instead of (1.6). Then the control of (1.8) can be done by simply state feedback.

However (1.8) will be of any utility, if it is really representative of (1.6). This means that performances (and stability) of a state feedback control designed and verified over (1.8), must be effectively maintained or guaranteed when this control, through its matched state observer, will be transferred to (1.6) and in turn to the real process.

Moreover, if the previous condition are satisfied and the model is representative of the reality the whole schema assumes an interesting interpretation of *model reference*, which is actually one of the approaches proposed in the literature for closed loop control:

- The model (1.8) with its control becomes the desired closed loop reference model, indicating how we want the objectives (the estimated objectives as the real ones cannot be measured) to behave in closed loop.
- However in turn, the performances guaranteed by the estimation errors assure that the real objective will stay necessarily close to their estimates, allowing estimator and state feedback, jointly, to achieve the desired goal in controlling the process.

We will see in the next chapters that a model similar to (1.8) actually exists, if the control has a solution. For that, certain conditions in building the estimator and designing state feedback must be fulfilled. The interesting aspect is, however, that even if the needed conditions are not exactly satisfied, the proposed scheme shows in practice to be fairly robust in guaranteeing the real performances and it will be at the basis of the approach proposed in this book and implemented in G++ for designing controls.

Transparent box, and black box models are put in relationship in figure 1.14:

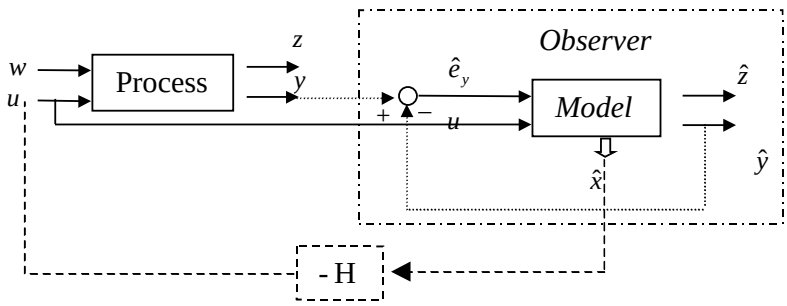

Fig. 1.14 Relationship between black box model and process – feedback control

We have seen that linking the two model representations is critically related to the asymptotic stability of matrix $A - KC_2$. In general the pair (A, C_2) is not completely observable, then we will require detectability, so the extended system must be *detectable* from C_2.

Dually, a state feedback of (1.8) that guarantees stability depends on the controllability pair (A, B_2). In general this pair is not completely controllable, so we will require stabilizability, and that the extended system is *stabilisable* from B_2.

1.6 The control problem

The control problem can be stated very preliminary as the selection of a control signal *u* to apply to the process to maintain (regulate) some output signals of the process to a set point, or force them to follow (tracking) reference signals, in spite of the disturbances or uncertainties present on the plant.

If some of the external disturbances can be measured we can control the system through *direct disturbance compensation*. This situation alone is rarely useful, and the achieved control results of poor quality.

One examples is given by low cost home temperature controls exploiting the measurements of the external temperature.

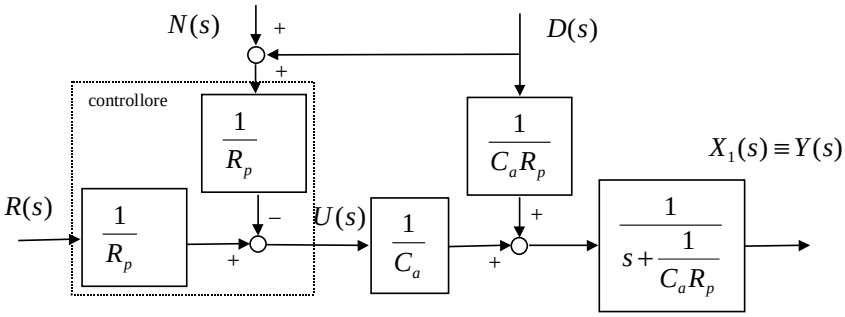

Fig. 1.15 The control problem – direct disturbance compensation

Selected properly the controller parameters, the output of the system, in this case the internal environment temperature, can be theoretically insensitive to disturbances. This kind of control has, however, several drawbacks:

- measurements are in turn affected by noise influencing the control;
- compensation is critically based on the knowledge of the system parameters (in this case R_p). If these parameters change without notice compensation loses its effectiveness;
- such compensation can operate in steady state of slowing varying disturbances.

A much better result is achieved with a *feedback control*. In this case system outputs are measured, the measure is compared with the reference, and when an error is detected the error signal is applied to the controller that generates a control input to correct the output.

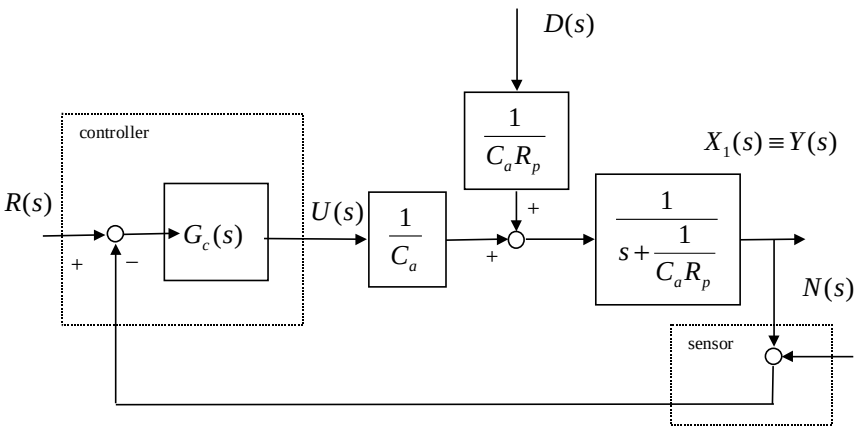

Fig. 1.16 Feedback control

Then it may be useful to integrate feedback with direct compensation to improve performances.
Feedback is a much powerful control tool with respect to direct disturbance compensation to guarantee insensitivity to uncertainties, to achieve precision in steady state and to impose desired dynamics during the transitions.
The design of the control is based on two interlacing aspects:

- the characteristics of the *feedback loop* [4] with effects on disturbances and uncertainties;
- the dynamics behavior of the reference-output channel in closed loop with effects on the ability of the controlled system to track reference signals.

1.7 An example of multivariable control

In a control system are present in general more than one control variable and output measure. Let consider a thermal control system where the heater is represented by radiators with hot water warmed up by a central thermal station. The main variables are:
$q_b(t)$ the quantity of heat transferred by the burner in the thermal station to the water in the boiler
$t_b(t)$ the water temperature at the boiler
R_r, $q_r(t)$ the thermal resistance and the quantity of heat transferred by the radiator
$q_{by}(t)$ the quantity of heat that, through a by-pass at the radiator, returns to the boiler
$q_a(t)$, $q_d(t)$ the quantities of heat transferred to the controlled environment and lost in the circuit.

[4] The feedback loop is the function established between input and feedback return signal when the feedback loop is opened.

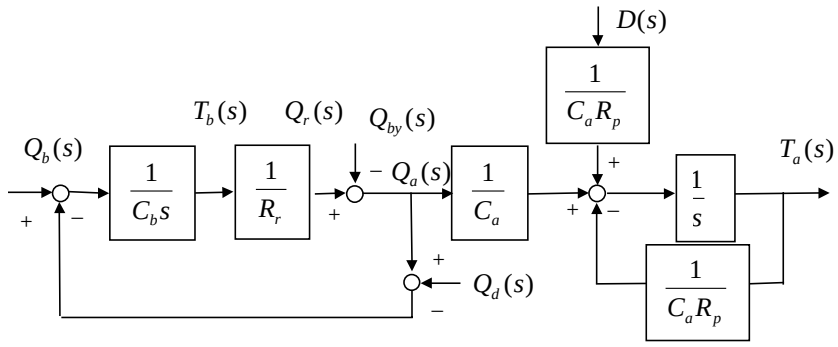

Fig. 1.17 Thermal system with a central boiler and hot water radiators

$$\begin{vmatrix} \dot{x}_1(t) \\ \dot{x}_2(t) \end{vmatrix} = \begin{bmatrix} -\frac{1}{C_a R_p} & \frac{1}{C_a R_r} \\ 0 & -\frac{1}{C_b R_r} \end{bmatrix} \cdot \begin{vmatrix} x_1(t) \\ x_2(t) \end{vmatrix} + \begin{bmatrix} -\frac{1}{C_a} & 0 \\ \frac{1}{C_b} & \frac{1}{C_b} \end{bmatrix} \cdot \begin{vmatrix} q_{by}(t) \\ q_b(t) \end{vmatrix} + \begin{bmatrix} \frac{1}{C_a R_p} & 0 \\ 0 & \frac{1}{C_b} \end{bmatrix} \cdot \begin{vmatrix} t_e(t) \\ q_d(t) \end{vmatrix}$$

with state variables $x_1 = t_a$, $x_2 = t_b$.
Factorized in diagonal form the coefficient matrix of the model becomes:

$$A = M \Lambda M^{-1} = \begin{bmatrix} \frac{1}{C_a R_r} & \frac{1}{C_a R_r} \\ 0 & \frac{C_b R_r - C_a R_p}{C_b C_a R_p R_r} \end{bmatrix} \cdot \begin{bmatrix} -\frac{1}{C_a R_p} & 0 \\ 0 & -\frac{1}{C_b R_r} \end{bmatrix} \cdot \begin{bmatrix} C_a R_r & -\frac{C_b C_a R_p R_r}{C_b R_r - C_a R_p} \\ 0 & \frac{C_b C_a R_p R_r}{C_b R_r - C_a R_p} \end{bmatrix}$$

$$C_a = 10[kCal/\ C]$$
$$R_p = 100[\ C \cdot s / kCal]$$
$$C_b = 100[kCal/\ C]$$
$$R_r = 1000[\ C \cdot s / kCal]$$
$$\Delta = 10[s]$$

Matrices of the discrete time model, obtained with the approximation previously described are:

$$\overline{A} = \begin{bmatrix} 0.99 & 10^{-3} \\ 0 & 0.9999 \end{bmatrix}, \quad \overline{B} = \begin{bmatrix} -1 & \\ 0.1 & 0.1 \end{bmatrix}, \quad \overline{B}_d = \begin{bmatrix} 10^{-2} & 0 \\ 0 & 10^{-1} \end{bmatrix}$$

and the transfer functions:

$$\begin{vmatrix} T_a \\ T_b \end{vmatrix} = \frac{1}{(z-.99)(z-.9999)} \left(\begin{bmatrix} -(z-1) & 10^{-4} \\ 0.1(z-.99) & 0.1(z-.99) \end{bmatrix} \cdot \begin{vmatrix} Q_{by} \\ Q_b \end{vmatrix} + \begin{bmatrix} 0.01(z-.9999) & 10^{-4} \\ 0 & 0.1(z-.99) \end{bmatrix} \cdot \begin{vmatrix} Q_d \\ T_e \end{vmatrix} \right)$$

With the results of the next chapter we will be able to verify that the exact sampled data model with the present choice of sampling period will not be much different.
Let us approach a first one input-one output closed loop control by regulating the environment temperature acting on the quantity of heat given by the burner at the boiler.
As an example we will use the following controller to stabilize the closed loop system:

$$\hat{x}_{i+1} = 0.1\hat{x}_i - 2080(r_i - t_{ai})$$
$$u_i = \hat{x}_i + 2600(r_i - t_{ai})$$
$$G_c(z) = \frac{2600(z-0.9)}{z-0.1}$$

- Check the poles of the closed loop system
- Indicate how we can design a different controller by assigning the closed loop poles
- Try to adopt the theory of separation by building a state observer and state feedback on the observed states
- Simulate the response of the environment temperature and water temperature at the boiler to a step of the set point

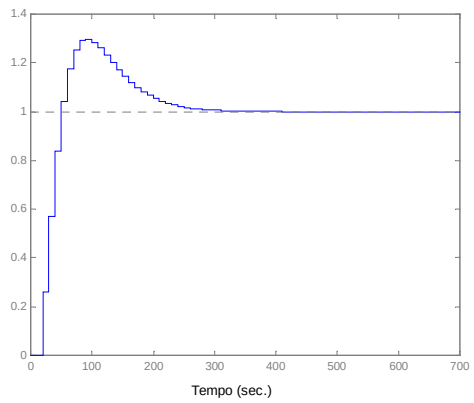

Fig. 1.18 Environment temperature to a step of the set point

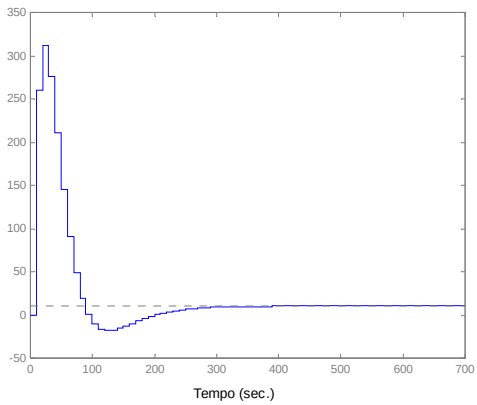

Fig. 1.19 Water temperature to a step of the set point

In the previous figures we can see that a limitation of previous control is the long response time and the unacceptable high value reached by the water temperature.
A far better result is obtained with a multivariable control, acting on both control inputs $q_{by}(t)$ and $q_b(t)$, and exploiting the measures of both states $t_b(t)\ t_a(t)$.
Let try to control the burner with a feedback from the water temperature and the by-pass with a feedback from the environment temperature. The proposed gains are:

$$k_1 = -0.5, \quad k_2 = 5$$

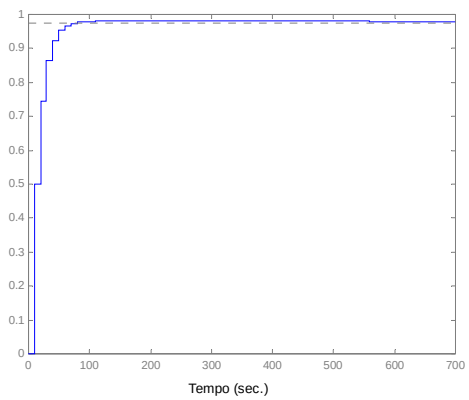

Fig. 1.20 Environment temperature to a step of the set point

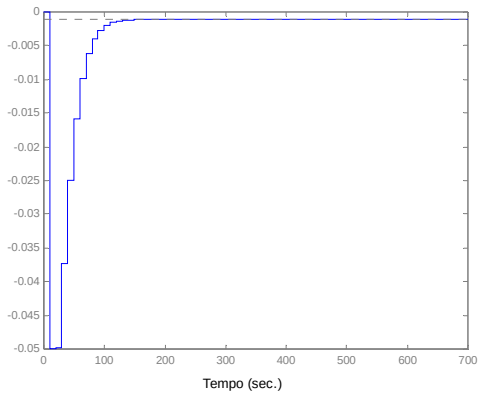

Fig. 1.21 Water temperature to a step of the set point

The problems of the previous control are completely disappeared.

1.8 Block diagram algebra

Block diagram algebra is a graphical manipulation that applies to linear and time invariant systems, both continuous or discrete time.
The elements of the representation are three:
The application of a signal to a algebraic or dynamic operator

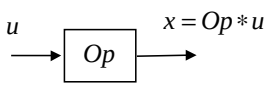

Fig. 1.22 Linear dynamic operator

Node of summation:

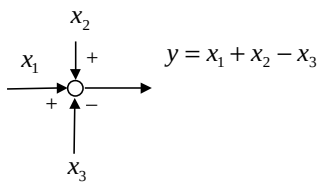

Fig. 1.23 Node of summation

Point where a signal is taken:

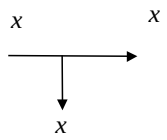

Fig. 1.24 Point where a signal is taken, e.g. a measure

1.8.1 Continuos time

When a block diagram represents a continuos time system its signals are continuous functions of time. The application of a signal to a dynamic operator is implemented by the convolution integral.
In particular, two representative operators in this realm are the *integrator*

$$x(t) = \int_0^t u(\tau)d\tau$$

and the pure *delay T*:

$$x(t) = u(t - T)$$

Instead of the time domain we can represent the system in the Laplace transform domain. Arcs of the block diagram brings the transform of the signals and the operators their transfer function. Application of a signal to a dynamic operator maintains the interpretation of algebraic product between operator transfer function and operator transform.
In particular, operator of integration and operator of delay are, respectively:

$$X(s) = \frac{1}{s}U(s),\ X(s) = e^{-sT}U(s)$$

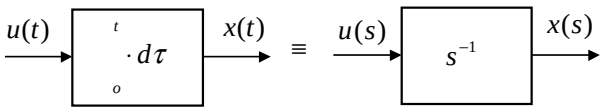

Fig. 1.25 Integrator in time and in the transform domain

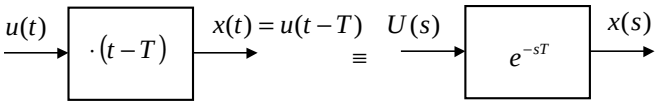

Fig. 1.26 Delay operator in time and transform domain

1.8.2 Discrete time

In the discrete time case signals are sequences of samples, the product of convolution becomes the summation of convolution, and the elemental operators are *summation* of the samples Σ (multiplied by the sampling period Δ to maintain approximately equality between the energies of the signals in the two cases: represented in one case by the summation of the square of the samples and in the other by the integral of the square of the signal. If we introduce the operator of one sample delay q^{-1} summation can be expressed as:

$$x(k+1) = x(k) + \Delta \cdot u(k) \Leftrightarrow x = \Sigma * u$$
$$x(k) = u(k-1) \Leftrightarrow x = q^{-1}u$$

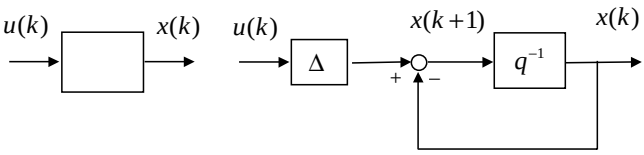

Fig. 1.27 Summation, corresponding to integration, in the domain of sampled data signals

As for continuous signals, sequences of samples have a symbolic representation, corresponding to Laplace transform, called Z transform, where the complex variable z^{-1} is the transform of the unitary delay.

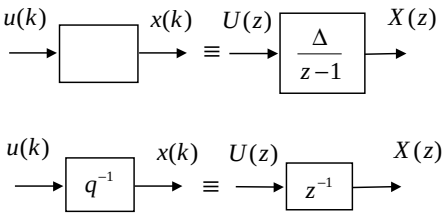

Fig. 1.28 Summation and delay in the domain of samples and of the transformation

In particular, the samples of a signal delayed of T, where $T = \Delta m$ are given by:

$$x = q^{-m}u \Leftrightarrow X(z) = z^{-m}U(z)$$

Solution of a block diagram, through the block diagram algebra, in its representation in the transform domain bring to the representation of a dynamic operator in the form of its transfer function.

1.8.3 Linearizing a non-linear system

Often the behavior of some block of the process is non-linear, see the relationship between the voltage at the resistor and quantity of heat dissipated in the environment of equation (1.3) . Linear system theory can be exploited to model systems through linearization, accounting for differences between process and linearized model to *parametric* or *additive disturbances* .

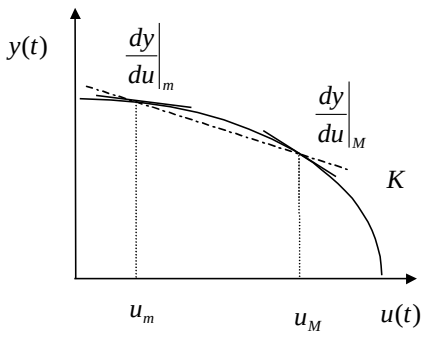

Fig. 1.29 Linearization of a non-linear gain characteristics

Let consider a static non-linear characteristics present inside a process, e.g. the amplifier at the input of a system. Let assume the maximum range of the input signal and inside this range consider the linear characteristic that approximate the non-linear one: in figure 1.29 the line with angular coefficient *k*. If we image that the input signal can assume a nominal value, taken inside the admissible range, and for each nominal values have small variations in its neighbor, the system will show for these perturbations a gain given by the tangent to the non-linear characteristic. The angular coefficient of this tangent will change inside the range. The difference between the tangent and the non-linear characteristic can be accounted for parameter variations in the process, and half of the difference between maximum and minimum values, normalized to the average, can be assumed as a *index of non-linearity* of the characteristic. Linear characteristics have index equal to zero with the index growing greater is the discrepancy with respect to linearity.
The index of non-linearity can, then, be formalized as:

$$nl = \left| \frac{dy/du|_M - dy/du|_m}{2 \cdot k} \right| .$$

1.9 Bibliography

[1] C. E. Rohrs, J. L. Melsa, D. G. Schultz, “Linear Control Systems” McGraw-Hill Int. Eds., New York, 1993
[2] G. F. Franklin et al. “Feedback Control of Dynamic Systems” Addison-Wesley, third edition, 1994