Chapter 7

STATE VARIABLE CONTROL SYNTHESIS

This chapter solves the problem to synthesize the control system, that satisfies given specifications, in the state space domain. The extended systems representing the problem complete in this chapter the schemas of chapter 5, covering a full envelop of specifications. The approach is introduced using the prototypes of a few significant use cases.
The first prototype approaches the basic requirement of the loop sensitivity function. It considers the output disturbance rejection. The second problem add to the first one constraints on the control activity. The third prototype integrates uncertainty specifications to requirements, approaching a problem of robust performances. The last example, finally, introduces along with the loop also reference-output specifications in a two degree of freedom design.
The design of the control is divided in its two fundamental components: state observer and state feedback. This decomposition introduces naturally an abstract model, representative of the system, its uncertainties and its requirements: the black box model discussed at the beginning of the book.
We already know that the structure observer-feedback generates with simplicity the class of all controllers guaranteeing internal stability of the loop (figure 4.21), we will show here that the same structure, with a few modifications, will also be able to guarantee a bound on the H_∞ norm of the extended system in closed loop. And this characteristics, on turn, allow to satisfy the desired specifications of the control problem. The process of design is translated in the solution of two linked problems of state feedback: one for the observer and one for the control. Both problems are approached by operating on the gramians of the closed loop with the aim to make the state space of the closed loop system as more unobservable as possible from the objective estimation errors, and uncontrollable from the external disturbances.
Results of this chapter refer to the books [1] and [2]. For an elemental treatise see also [3].

7.1 A review of basic closed loop requirements

7.1.1 Reducing sensitivity to output disturbances

Classical specifications require to reduce sensitivity on the controlled output of output disturbances. A description of the dynamics of disturbances, the assignment of a weighting function on the objectives or both define the specifications

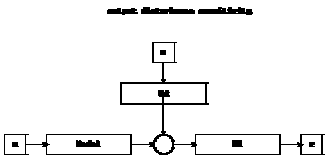

Fig. 7.1 Specification on disturbance sensitivity

7.1.2 Control activity and measure noise

Previous model doesn't take into account control activity as well as noise on the output measures. The two aspects are inextricably linked each other. The control activity that concerns the designer has normally two origins: transients in response to reference tracking or measurement noises. Both causes affect control in the high frequency range. We have not considered here effects to process disturbances, as these cover a lower frequency spectra and usually doesn't create situations of excessive control activity.
As we want to guarantee that the control has not excessive amplitude in all frequency range, in particular high frequency, it is necessary that the weight of the control, as an objective is a proper dynamical operator or a pure gain. Dually, as measure noises are characterized by high frequency components, it is necessary that the filter describing its dynamics is proper or a pure gain. We extend previous example adding control activity specifications.

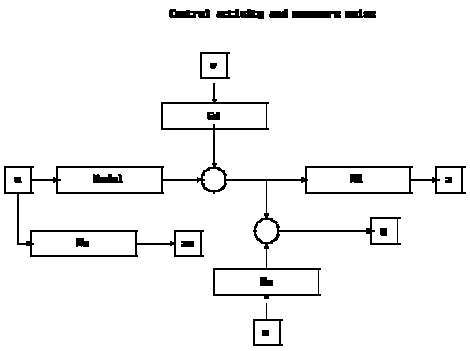

Fig. 7.2 Requirements on control activity

7.1.3 Multiplicative plant uncertainty

Let further extend the last model adding to performance uncertainty specifications. This example consider multiplicative uncertainty, but according to the needs any other of the schemes introduced in section 5.1.3 can be adopted.

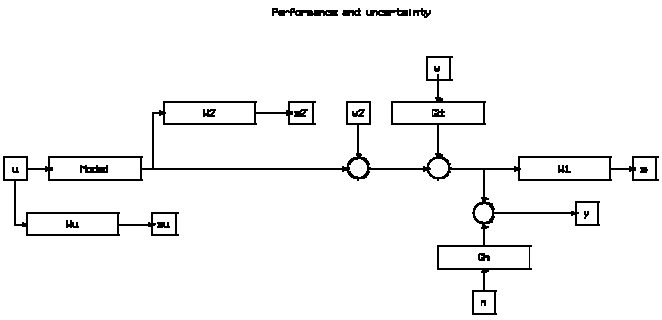

Fig. 7.3 Uncertainty in multiplicative form

7.1.4 A two degree of freedom design

We add to loop specifications of figure 7.3 also reference-output requirements. We assume, along with process outputs, to have independent measures of the reference. G_{eqdes} is the desired closed loop function and represents *the reference model* we want to match with the closed the loop.

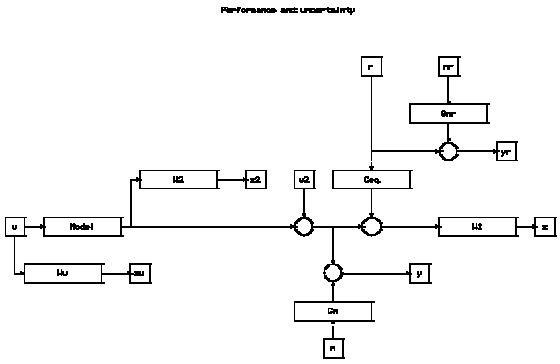

Fig. 7.4 Requirements on reference tracking

The resulting controller will be composed of two parts: a feed-forward block G_{cru} from the reference to the control and a feedback block G_{cyu} from the system output to the control in a two degree configuration, as shown in figure 4.8 of chapter 4.

7.2 The extended system

From previous considerations the most general state variable representation of an extended system assumes the following form

$$\begin{bmatrix} \dot{x} \\ z \\ y \end{bmatrix} = \left[\begin{array}{c|cc} A & B_1 & B_2 \\ \hline C_1 & D_{11} & D_{12} \\ C_2 & D_{21} & 0 \end{array}\right] \cdot \begin{bmatrix} x \\ w \\ u \end{bmatrix} . \tag{7.1}$$

D_{21} takes into account the presence of high frequency noise on measures, and dually D_{12} for high frequency weights of the control activity. D_{11} may or may not be present according to the problem. For simplicity, in the first part of this chapter we will consider the simplifying assumption $D_{11} = 0$

$$\begin{bmatrix} \dot{x} \\ z \\ y \end{bmatrix} = \left[\begin{array}{c|cc} A & B_1 & B_2 \\ \hline C_1 & 0 & D_{12} \\ C_2 & D_{21} & 0 \end{array}\right] \cdot \begin{bmatrix} x \\ w \\ u \end{bmatrix} \tag{7.2}$$

leaving the general case to a concluding section.
Moreover, imposing that each measure is affected by an independent noise and each control receives separately control activity specifications, we require that the extended system satisfies also the following conditions

$$\text{a) } D_{12}' \begin{bmatrix} C_1 & D_{12} \end{bmatrix} = \begin{bmatrix} 0 & I \end{bmatrix} \text{ e b) } \begin{bmatrix} B_1 \\ D_{21} \end{bmatrix} D_{21}' = \begin{bmatrix} 0 \\ I \end{bmatrix} \tag{7.3}$$

If these conditions are not originally satisfied from the extended system of the desired problem, proper transformations on inputs and measures vectors can be found that bring to (7.3).
The objective of the problem is the design of a controller closing the loop from y to u that guarantees an upper bound to the norm of the extended system disturbances objectives w-z in closed loop. As the gains of the weights can be arbitrarily chosen from the designer, by properly selecting these gains, conventionally the bound that indicates requirement satisfactions is always assumed equal to one.

7.3 Two prototypes of control

We have seen that state observer and state feedback play an important role in the design of a control.
We endorse this two steps design procedure. In our interpretation, the observer defines the black box model which input is the control input, the disturbance is observer output reconstruction error, the objectives are the observer estimated objectives and the states are directly available for closing the loop. This model, under certain conditions is equivalent, from the point of view of control performances, to the original system.
The design of the control of this black box model, using state feedback, fixes a reference for the behavior we desire from our closed loop system. The observer, from which the black box model was generated, guarantees, with its performances, that the controlled system actually tracks this reference.
Hence, before approaching the complete problem to design an output feedback control we study preliminarily the two sub-problems that compose it offering two dual interpretations of the liaisons between them.

7.3.1 State feedback

The most simple case of control, and certainly the most effective, from the point of view of reachable performances, is when all external disturbances and all states are perfectly known. This problem is called in the literature control with *total information*, and the extended system that represents it assumes the following special form:

$$\begin{bmatrix} \dot{x} \\ z \\ y \end{bmatrix} = \left[\begin{array}{c|cc} A & B_1 & B_2 \\ \hline C_1 & 0 & D_{12} \\ I & 0 & 0 \\ 0 & I & 0 \end{array}\right] \cdot \begin{bmatrix} x \\ w \\ u \end{bmatrix} \tag{7.4}$$

We have already seen in chapter 4 conditions to guarantee stability and impose closed loop poles by state feedback

$$u = -Hx. \tag{7.5}$$

In the design phase, along with stability, we ask to the control to satisfy specifications expressed by the value assumed by the closed loop norm of the operator *w*-*z*.
It is well documented in any text of optimum control that with perfect knowledge of all states and with performances measured by a square norm of the closed loop operator the best control is an algebraic feedback from the states. Moreover, this performance can be improved by adding to the control an algebraic function of the disturbances only if these disturbances are directly present in the objectives, i.e. $D_{11} \neq 0$.
Let recall from chapter (7.5) that the closed loop operator with a feedback of the type (7.5) assumes the following form

$$z = \left[\begin{array}{c|c} A - B_2 H & B_1 \\ \hline C_1 - D_{12} H & 0 \end{array}\right] \cdot w \tag{7.6}$$

We note that the design parameter *H* is present in the matrices that form the observability gramian of the closed loop operator. We already know that this gramian plays a fundamental role either to minimize the H_2 norm of the operator (7.6), or to guarantee an upper bound of the H_∞ norm of the same operator, indicated here as

$$\left\| G_{w \to z}(s) \right\|_\infty \leq \gamma_c \cdot$$

7.3.2 Output estimation

The second problem of interest is called *output estimation*. It is dual of the previous one and is formulated, again, as a control problem with an extended system with the following special form, where matrix D_{12} is the identity:

$$\begin{bmatrix} \dot{x} \\ z \\ y \end{bmatrix} = \left[\begin{array}{c|cc} A & B_1 & B_2 \\ \hline C_1 & 0 & I \\ C_2 & D_{21} & 0 \end{array}\right] \cdot \begin{bmatrix} x \\ w \\ u \end{bmatrix} \tag{7.7}$$

Interpretation of this problem, already introduced in chapter 4, is the following: *y* are the measure on the process, $-C_1 x$ is an unmeasurable system output we want to estimate and *u* is its estimate we want to design, with the objective to guarantee a small estimation error $z = C_1 x + u$. The presence of the signal *u* in input to the process through the

matrix B_2 is a slight generalization with respect to the classical state estimation problem, that doesn't modifies significantly standard results[13].
The solution of the problem is the classical state estimator

$$\begin{bmatrix} \dot{\hat{x}} \\ u \\ \hat{y} \end{bmatrix} = \left[\begin{array}{c|cc} A & K & B_2 \\ \hline -C_1 & 0 & 0 \\ C_2 & 0 & 0 \end{array}\right] \cdot \begin{bmatrix} \hat{x} \\ \hat{e}_y \\ u \end{bmatrix}, \quad \hat{e}_y = y - \hat{y} \tag{7.8}$$

with a filter that generates u from y of the form

$$u = \left[\begin{array}{c|c} A - B_2C_1 - KC_2 & K \\ \hline -C_1 & 0 \end{array}\right] \cdot y \tag{7.9}$$

obtained performing the proper substitutions in (7.8), and error model given by

$$\begin{bmatrix} \dot{\hat{e}} \\ z \\ \hat{e}_y \end{bmatrix} = \left[\begin{array}{c|c} A - KC_2 & B_1 - KD_{21} \\ \hline C_1 & 0 \\ C_2 & D_{21} \end{array}\right] \cdot \begin{bmatrix} \hat{e} \\ w \end{bmatrix}. \tag{7.10}$$

In particular, from (7.10) the operator between disturbances and estimation error is

$$\begin{bmatrix} \dot{\hat{e}} \\ z \end{bmatrix} = \left[\begin{array}{c|c} A - KC_2 & B_1 - KD_{21} \\ \hline C_1 & 0 \end{array}\right] \cdot \begin{bmatrix} \hat{e} \\ w \end{bmatrix}. \tag{7.11}$$

If you compare the dual of the operator (7.11) with (7.6) you see that the two problems of state estimation and state feedback are perfectly dual. Remembering that H_2 and H_∞ norms of a dynamical operator and of its transpose are identical, techniques of design, with the objective to minimize or guarantee an upper bound of the closed loop operator are the same in the two cases.
The design requires to compute a feedback K for the observer which minimizes the norm of the operator (7.11).
The same considerations exposed for state feedback apply here. A central role is played by the controllability gramian of the closed loop operator.
If we assume as a measure of performance the H_∞ norm of the closed loop operator we indicate the guaranteed bound as

$$\left\| G_{w \to z}(s) \right\|_\infty \le \gamma_o ,$$

analogously to what done for the control.

[13] If in the model $B_2 = 0$ the result is exactly the classical case.

7.3.3 Performance of observer and state feedback

We approach the problem to find observer or state feedback that guarantee a bound on the closed loop disturbance - objective operator norm.
The two problems are equivalent involving one the observability the other the controllability gramian. It is sufficient to develop the solution for one of the problems and approach the other transposing the operator. Here, for simplicity, we develop the state feedback.
We have seen in chapter 3 that the key point to solve the problem is given by the observability gramian, and the next one is a preliminary result we will exploit later.

State feedback minimizing $\|G_{w\to z}(s)\|_2$

We adopt to evaluate performances the H_2 norm of the closed loop *w*-*z* operator. The solution of the problem is already contained in section 3.2.2 of the chapter 3. The problem is solved minimizing the observability gramian of the closed loop operator (7.6).
The observability pair involved is

$$\left(A - B_2 H, C_1 - D_{12} H\right) \tag{7.12}$$

The value that reaches the minimum is

$$H = -\left(D_{12}' C_1 + B_2' X\right) \tag{7.13}$$

with observability gramian *X*

$$\left(A - B_2 H\right)' X + X\left(A - B_2 H\right) + \left(C_1 - D_{12} H\right)'\left(C_1 - D_{12} H\right) = 0\,. \tag{7.14}$$

Note that the solution (7.13) applies to a condition a little more general than (7.3), i.e. $D_{12}' C_1 \neq 0$. If the simplifying condition (7.3) is verified, with $D_{12}' C_1 = 0$, (7.13) simplifies to

$$H = -B_2' X \tag{7.15}$$

Previous results are interesting as they show that the aim of the control is to make the state space driven by disturbances unobservable from the objectives, or dually for the observer, the state space of the observer error uncontrollable from disturbances.
H_2 is, however, scarcely useful to represent the relationship existing between the norm of disturbances and objectives in closed loop and hence control specifications. A second result, more interesting, is to find *H* that guarantees an upper bound for the H_∞ norm. It is discussed in the next section.

State feedback guaranteeing $\|G_{w\to z}(s)\|_\infty \le \gamma_c$

Let approach the problem to determine the feedback that guarantees an upper bound of the H_∞ norm of the operator $G_{w\to z}(s)$. The following result is available

Corollary 7.2 *Proportional state feedback with guaranteed* H_∞

If a value H exists that guarantees the upper bound $\|G_{w\to z}(s)\|_\infty \le \gamma_c$ then the following Lyapunov equation has a solution

$$(A-B_2H)'X + X(A-B_2H) + L'RL + (C_1 - D_{12}H)'(C_1 - D_{12}H) = 0 \tag{7.16}$$

with

$$H = -B_2'X \quad \text{and} \quad L = \gamma_c^{-2}B_1'X \tag{7.17}$$

This result is obtained from theorems 3.2 e 3.3 adding the simplifying assumption (7.3).

From theorem 3.3[14] of the chapter 3 we know that for any value of H guaranteeing asymptotic stability (the system has, hence, finite H_∞ norm), there exists a value of γ_c so that is verified $\|G_{w\to z}(s)\|_\infty \le \gamma_c$. For this value the following observability pair exists

$$\left(A-B_2H, \begin{bmatrix} C_1 - D_{12}H \\ \gamma_c L \end{bmatrix}\right) \tag{7.18}$$

with gramian X

$$(A-B_2H)'X + X(A-B_2H) + (C_1 - D_{12}H)'(C_1 - D_{12}H) + \gamma_c^{\,2}L'L = 0 \tag{7.19}$$

and L linked to X from the relationship

$$L = \gamma_c^{\,-2}B_1'X\ . \tag{7.20}$$

Moreover, with this value of L the disturbance signal built as $w^* = Lx$ maximizes the difference $\|z^*\|_2 - \gamma_c \cdot \|w^*\|_2 \le 0$ bringing it close to zero. Hence the norm of the objective z^* is close to the upper bound guaranteed by the operator norm $\|z^*\|_2 \approx \|G_{w\to z}(s)\|_\infty \cdot \|w^*\|_2$.

For this reason the signal w^* is called the disturbance in the worst conditions[15].

Integrating the two iterative procedures contained in the theorems 3.4 and 3.3, in the search for a solution we can use the results of the previous section to find the feedback H that minimizes the gramian X of the observability pair (7.18), in the presence of the worst disturbance w.

Interpretation of previous result is the following: the feedback H exists and guarantees

---

[14] You will note differences between the formulas of the indicated theorem and the present ones. These differences are simply the consequence of the simplified assumptions introduced by (7.3)

[15] In reality inequality is close but non coincident with the limit, so the disturbance is not properly the worst one. It is possible, however, to create a sequence of disturbances with the inequality that reaches asymptotically the limit, assigning to γ_c a sequence of values approaching monotonically the value of the norm of the operator.

$$\left\| G_{w\to z}(s) \right\|_\infty \le \gamma_c$$

if and only if the minimization process has a solution.
However, if there exists a solution, the actual value of the norm found will be in general lower than γ_c.

We are not able to minimize γ_c, however, once a solution has been found the process can be repeated for a smaller value of γ_c to verify if better performances exists. Viceversa, if no solution is found no feedback *H* exists that reaches the proposed bound, and it is necessary to increase the value of γ_c.

Figure 7.5 shows a block diagram representing the situation of a feedback in the worst disturbance condition:

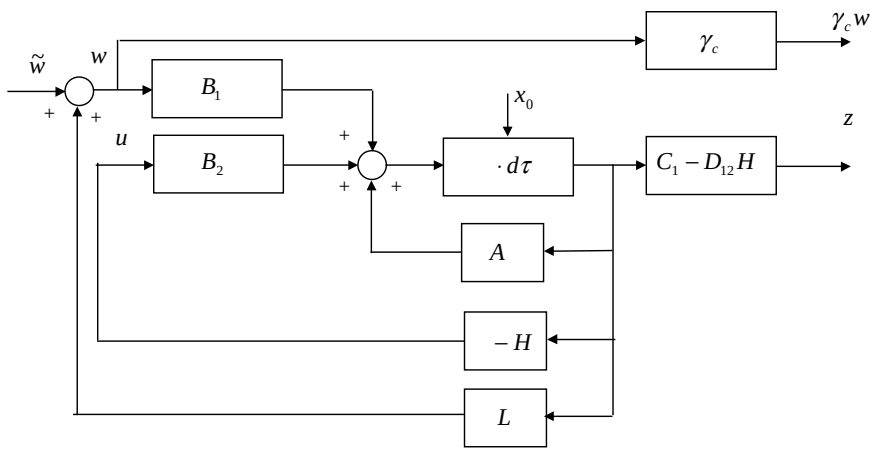

Fig. 7.5 Interpretation of the gramian of the closed loop system

Let note that the model (7.6) in the neighbor of the worst disturbance behaves with a dynamics given by

$$z = \left[\begin{array}{c|c} A - B_2 H + B_1 L & B_1 \\ \hline C_1 - D_{12} H & 0 \end{array} \right] \cdot \tilde{w} \tag{7.21}$$

Conclusions

The design of a state feedback based on H_2 or H_∞ norms of the disturbance-objective operator are conceptually very similar. In both cases the problem is solved minimizing

an observability gramian of the closed loop system. In the first case the gramian is defined by the pair

$$\left(A - B_2 H, C_1 - D_{12} H\right) \tag{7.22}$$

in the second case by

$$\left(A - B_2 H, \begin{bmatrix} C_1 - D_{12} H \\ \gamma_c L \end{bmatrix}\right) \tag{7.23}$$

While in the first case the choice of the control is independent from disturbances and offers the minimum of the H_2 operator norm, in the second case, the result is a function of disturbances in the worst conditions, and the result guarantees an upper bound of the H_∞ norm of the operator.

7.3.4 Design examples

Approaching isolate examples of state feedback or observer design is very instructive, even if they offer only partial solutions, to understand the problems posed by the feedback. For this reason we consider here the two dual cases: input noises with state feedback and measure noise with objective estimation.

Reducing sensitivity of input disturbance has a cost in term of control activity

The first aspect to consider when a state feedback, in the presence of input disturbances, is being designed is the compromise between control activity and disturbance sensitivity reduction. The cost to pay for the former grows as the performance is improved for the latter, On the main time the feedback gain, and the response speed grow

Example 7.1 Airplane longitudinal attitude control – reduction of effect of disturbances

Let consider the model of the attitude control of an airplane contained in the following figure

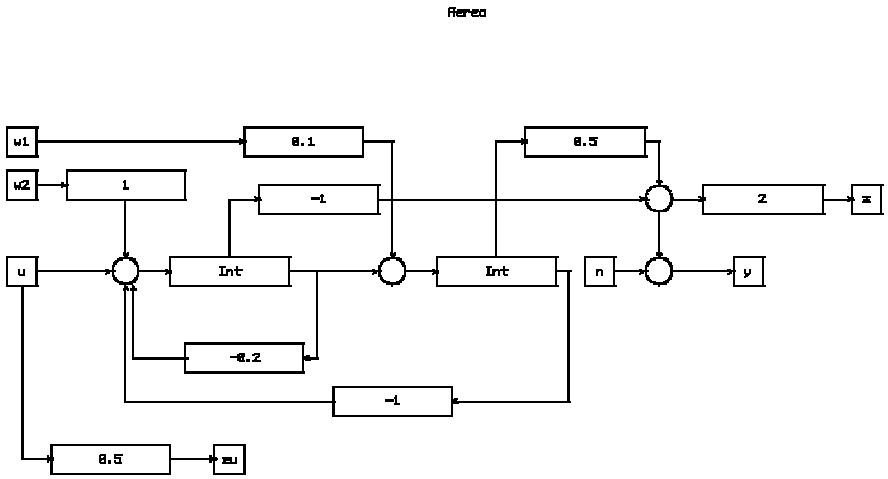

Fig. 7.6 Longitudinal attitude control of an aircraft

w_1, w_2 are disturbances introduced by the control and by the air turbulence, modeled as white noise, the control *u*, is the angular position of the elevator and *z* is the attitude angle of the aircraft, with respect to horizon, finally, *y* is the measure of the attitude angle affected by noise. In this example *y* is not used as we perform a simple state feedback.

The block diagram can be found in the directory of the examples of the programming environment with the name of this chapter. It can be open with the G++ editor.

As an initial experiment we try to assign the following pair of closed loop poles: $(-0.126 \quad \pm 0.993)$. Feedback gains are $(0.00131629 \quad 0.0513771)$. Output and control, when disturbances are a white noise with unit variance are plotted in the next figure (output in black, and control in blue colors)

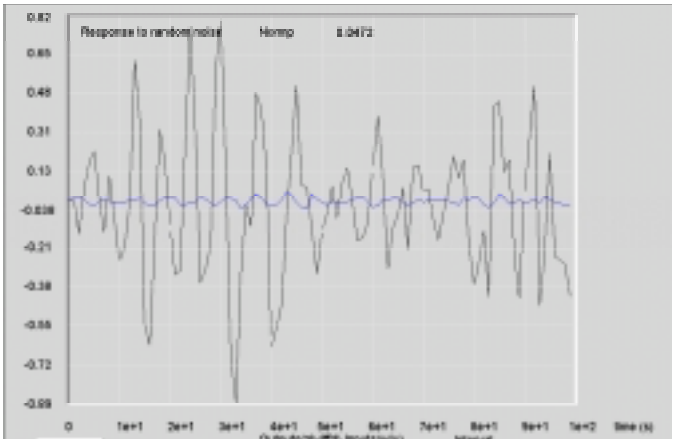

Fig. 7.7 Responses of output and control to input white noise 1

The *P* norm of the power spectra of the output and of the control are respectively 1 and 0.05. The feedback in these conditions is very light, the effect of disturbances on the output is relevant, reciprocally the control activity is small.
Starting from this feedback value, let try now to reduce the observability gramian of the closed loop of the extended system 7.6 using the procedure described in chapter 3. With the weights adopted in 7.6, if $\|G_{eq}\|_2 \leq 1$ is achieved, we will have $\|z\|_P \leq 0.5$ and $\|z_u\|_P \leq 2$. Already at the first iteration performances are those of the next figure

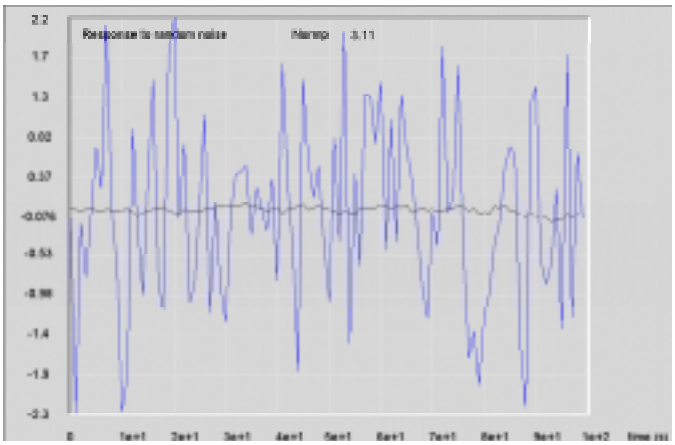

Fig. 7.8 Responses of output and control to input white noise 2

with P norm values of output and control, respectively, 0.15 and 3.
At convergence of the iterations we reach $\|G_{eq}\|_2 \le 1$, with a feedback

$$H = (1.24 \quad 4.1), \quad \lambda = (-3.7 \ -0.6) \tag{7.24}$$

The P norms of output and control assume the values of 0.4 and 1.41.
The H_∞ norm of the extended system in closed loop, that in this example has not specific interest[16] , assumes the value of 0.7 and the resulting transfer functions disturbance/output-control are represented in the following figure

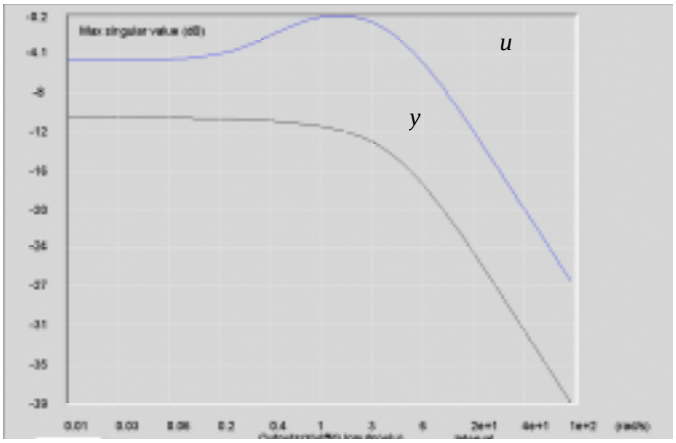

Fig. 7.9 Transfer functions between disturbances and output or control

Example 7.2 Attitude control – reference tracking

The model is identical to the previous example. We want to control now the response of the system in the transient to a reference signal. The reference signal has a limited band and it is specified as the output of the following second order filter

$$G_r = \left[\begin{array}{cc|c} 0 & 1 & 0 \\ -0.01 & -0.177 & 0.01 \\ \hline 1 & 0 & \end{array}\right] \tag{7.25}$$

The new extended system representing the problem is in figure 7.10

[16] Let see the exercise 1 of chapter 3.

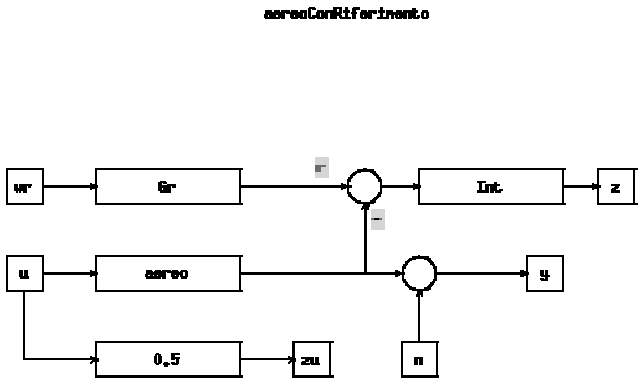

Fig. 7.10 Extended system with requirements on the reference tracking error

To guarantee a steady state error equal zero for the tracking error it is weighted by an integrator as objective.
The best achievable performance simply minimizing the H_2 norm are not completely satisfactory (the corresponding H_∞ norm is 5).

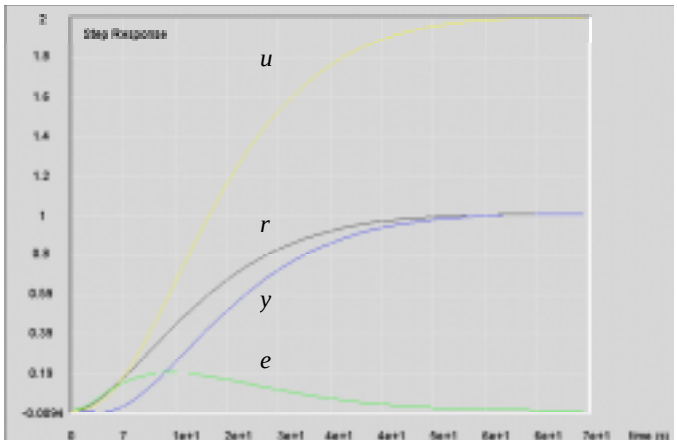

Fig. 7.11 Response to a filtered step - H_2

A far better result is obtained reducing the upper bound of the H_∞ norm, that can reach value 1. This example shows how in general H_∞ norm is more adequate than H_2 norm as a measure of performances.

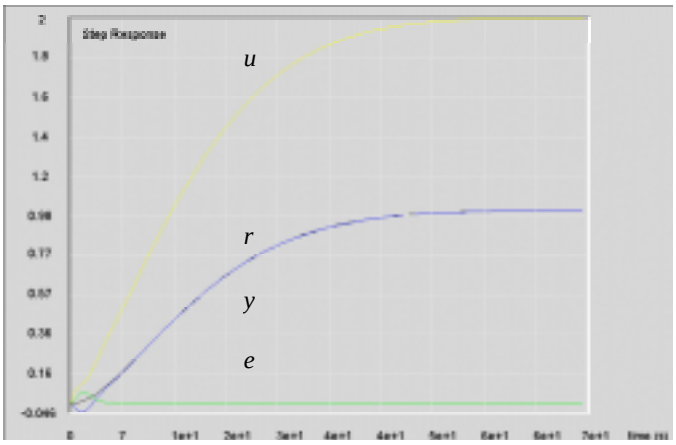

Fig. 7.12 Response to a filtered step - H_∞

It is interesting to ask the reasons for the anomaly in the response at the beginning of the transient. In 4.10 a clear delay is observed, in 4.10 the transient start in the opposite direction with respect to the steady state. Responsible for the phenomenon, well known in the tradition of servomechanisms (page. 157 of [4]), is the zero in the right half plane present in the longitudinal attitude control.
If the reference signal is available in advance a better response could have been obtained using a pre-action. We will discuss this topic in a specific section.
The resulting controller is composed of two parts: a plant state feedback and a dynamic filter in input to the reference, in a control structure resembling two degree of freedom of figure 4.10. This means, with a state variable interpretation, that for a correct control the reference signal alone is not sufficient, but are needed, as well, all states of its dynamics.

Note 7.1 Design technique

When the observability gramian is used as measure of the performances (H_2 or H_∞ norms of the closed loop system) we suggest in the first design experiments to assign small weights to the control activity, increasing them up to the limit of the desired requirements for the other specifications. It is not rare that these experiment will help to show inconsistency in the specifications.

However, adopting too small weights for the control activity, along with high signal value for the control, has the tendency to open unrealistically the band of the closed loop system.

The selection of measures, and level of noise influence the estimation

Approaching the estimation problem we have to remember that it is the perfectly dual of the previous state feedback control problem. The example, we consider, is still the attitude control in a transient due to reference tracking where we want to estimate the objectives.

Example 7.3 Attitude control in the transient – estimation of the objectives

The extended system of figure 4.10 is completed by adding measures.

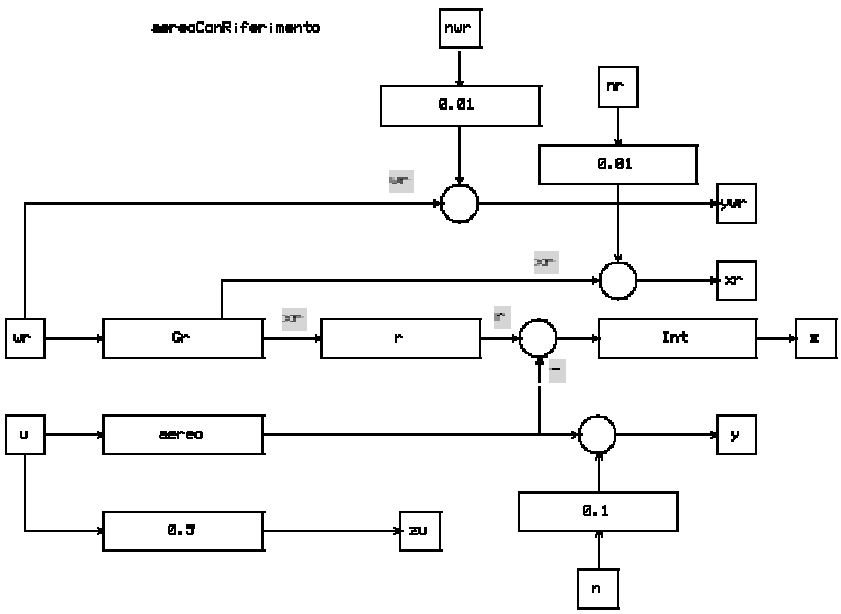

Fig. 7.13 Measures for the estimation in an attitude control problem

Along with the measures of the process output information of the reference signal is available: the reference itself, its states and w_r the signal that generate the reference. The noise gains represents the relative intensity with respect to the signal on which they are applied. As the reference is synthesized inside the controller all states associated to it are perfectly known. The presence of noises on the measured reference is an algebraic necessity required from the gramian minimiza-

tion[17], but also they can be considered numerical quatisation errors introduced by the digital filters that will implement these signals.
On this extended system we will perform a number of design experiments using different measurments. We start from the only measures of output, and reference. For each experiment the first row of the next table shows the results obtained by minimizing the H_2 norm, and the second minimizing the bound guaranteed by the H_∞ norm:

	H_2	H_∞
Reference alone	1.19	1.43
	2.04	1.07
Reference and its states	0.96	1.1
	1.91	0.78
Reference generator, states and reference	0.03	0.14
	0.04	0.13
Generator alone	0.03	0.18

Reduction of the H_∞ norm has as a consequence worsening of the H_2 norm with respect to its optimum value, however this is understandable.
The table shows that is important to use the reference generator.
This example has two relevant aspects to be mentioned:

1. The extended system is not detectable. In fact, in order to guarantee zero steady state estimation error, the weight on the estimation error contains an integrator.
   This situation is treated with a technique recently proposed by Mita and alt. [5] that introduces the notion of "*comprehensive stability*": according to this notion the design is performed using the only detectable subsystem and guaranteeing in the closed loop estimation error operator the presence of a zero that approximately cancels the unstable pole introduced by the requirements. The problem will be discussed in more details in the chapter devoted to design techniques.
   As an example, using only the reference generator signal the transfer function of the error operator is
   $$G_{wr\to z} = \frac{0.218162(s^2 + 0.00963515s + 0.000109297)(s + 0.0714633)}{s(s^2 + 0.177s + 0.01)(s + 0.442596)(s^2 + 1.58184s + 2.32367)}$$
   The pole in zero is approximately cancelled by one of the two zeros at very low frequency, the second zero ensure, again approximately, zero gain at steady state.
2. Not all dynamics of the extended system have input noise. As a consequence the dynamic components without disturbances (in this example the dynamics of the aircraft) are not modified by the feedback introduced by the observer.

[17] By duality these noise represent objectives on the control discussed in the previous note.

As a limiting case, measuring only the reference generator, the dynamics of the reference is not observable, the dynamics of the aircraft is not affected by noise, as conclusion the estimator degenerates in an open loop system as none of the model dynamics is modified by the feedback.
In this special case there are not negative consequences, as the process is asymptotically stable. In general is convenient to add input noise; it becomes mandatory when unstable poles of the model are not influenced by observer or state feedback.
In fact, as general rule to guarantee internal stability of the controlled system the whole controllable subspace must be affected by input disturbances and the whole observable subspace must have noises on the measures.

7.4 Output feedback

Finally, we approach the interesting case of control with *feedback from system outputs*. We continue to adopt the extended model (7.2) with the simplifying condition (7.3).

7.4.1 Minimizing the H_2 norm

We recall the decomposition observer-state feedback introduced in chapter 4. The state observer for estimating the objectives is given by

$$\begin{bmatrix} \dot{\hat{x}} \\ \hat{z} \\ \hat{y} \end{bmatrix} = \left[\begin{array}{c|cc} A & K & B_2 \\ \hline C_1 & 0 & D_{12} \\ C_2 & 0 & 0 \end{array}\right] \cdot \begin{bmatrix} \hat{x} \\ \hat{e}_y \\ u \end{bmatrix} \tag{7.26}$$

with $\hat{e}_y = y - \hat{y}, \quad \hat{e}_z = z - \hat{z}$. From this observer the black box model of the system is derived as

$$\begin{bmatrix} \dot{\hat{x}} \\ \hat{z} \\ y \end{bmatrix} = G_2 \cdot \begin{bmatrix} \hat{x} \\ \hat{e}_y \\ u \end{bmatrix} = \left[\begin{array}{c|cc} A & K & B_2 \\ \hline C_1 & 0 & D_{12} \\ C_2 & I & 0 \end{array}\right] \cdot \begin{bmatrix} \hat{x} \\ \hat{e}_y \\ u \end{bmatrix}. \tag{7.27}$$

Let note that the estimated objectives are the new objectives, and the output reconstruction error plays the role of external disturbance.
The estimation error of the objectives *z*, originated by the disturbances *w* is given by the operator

$$\begin{bmatrix} \dot{\hat{e}} \\ \hat{e}_z \end{bmatrix} = \left[\begin{array}{c|c} A - KC_2 & B_1 - KD_{21} \\ \hline C_1 & 0 \end{array}\right] \cdot \begin{bmatrix} \hat{e} \\ w \end{bmatrix}. \tag{7.28}$$

A feedback from the estimated states in model (7.27) results in

$$\begin{bmatrix} \dot{\hat{x}} \\ \hat{z} \end{bmatrix} = \left[\begin{array}{c|c} A - B_2 H & K \\ \hline C_1 - D_{12} H & 0 \end{array}\right] \cdot \begin{bmatrix} \hat{x} \\ \hat{e}_y \end{bmatrix} \tag{7.29}$$

A reasonable approach to the design is to select the observer that guarantees small estimation error of the objectives, e.g. minimizing the H_2 norm of the error operator (7.28), then, assumed (7.27) as a black box model of the process, considering output reconstruction errors $\hat{e}_y$ as independent disturbances, and the estimated objectives as new objectives, design autonomously the feedback from the estimated states minimizing the norm of the closed loop disturbances-objectives operator (7.29).
The design is very simple, as these two operations require to minimize controllability and observability gramians of the respective closed loop operators, independently.
If we adopt a dual vision, and invert the sequence designing the feedback first, and then the observer the result will be identical, as it carries to the minimization of the same gramians.
It will be no surprise discover that these two separate operations minimize, as final result, the H_2 norm of the closed loop operator disturbance-objectives

$$z = \left[\begin{array}{cc|c} A - B_2 H & KC_2 & KD_{21} \\ 0 & A - KC_2 & B_1 - KD_{21} \\ \hline C_1 - D_{12} H & C_1 & 0 \end{array}\right] \cdot w \tag{7.30}$$

This is the well know result of the *separation theorem* in the optimum LQG control[18]. [2].
The resulting control is sometime satisfactory. We know, however, that the H_2 norm doesn't offer a direct link between the norms of input disturbances and output objectives, hence doesn't help to satisfy any precise requirement, nothing to say of guaranteeing robust stability.
A certainly better approach is to design the control that guarantees an upper bound of the H_∞ norm of the closed loop operator discussed before. This will be done in the next section.

7.4.2 Guaranteed H_∞ norm in the sequence observer-state feedback

We show in this section how to integrate the two problems of estimation and state feedback in order to guarantee a bound of the H_∞ norm of the closed loop operator with output feedback.

We have introduced the black box model as a substitute of the original system. However this substitution is useful for the design if the H_∞ norm of the black box model using state feedback is a guaranteed bound of the actual performances when this feedback will used to implement output feedback on the real plant. Obviously not any ob-

[18] Linear Model, Quadratic performance index, Gaussian noise.

server is a candidate for the control design. We show in this sections which conditions are required for the result to be verified, and which interplay between observer and feedback originates in closing the feedback.

At the basis of the solution of the robust control design there are two intuitions: the first is obvious, the second has a formal proof found in the texts for specialists to whom the interested reader is addressed (e.g. [1] o [2]):

1. State observer is the reference point of the design. In fact, the norm bound $\left\| G_{w \to \hat{e}_z}(s) \right\|_\infty \le \gamma_o$ for the error, adopted in estimating the objectives with an observer, represents the best result we may expect to obtain for the performances of the output feedback control – "*control performances cannot be better than the error performance in estimating the objectives* ".
2. The second intuition is that the black box model adopted for designing state feedback, cannot be any, but it must result from the best observer in the presence of disturbances in the worst conditions, as computed in the previous sections.

These two intuitions integrate each other in the principal result of this section, that we present in the form of a theorem.

Theorem 7.2 *Output feedback with guaranteed performance of the H_∞ norm*

If the best objective estimator, designed in the worst disturbance conditions for a given bound $\left\| G_{w \to \hat{e}_z}(s) \right\|_\infty \le \gamma_o$ exists, and a state feedback on the black box model obtained from this estimator exists with control performance $\left\| G_{\hat{e}_y \to \hat{z}}(s) \right\|_\infty \le \gamma_c$, then, the output feedback control obtained integrating estimator and state feedback, guarantees internal stability, and performances given by

$$\left\| G_{w \to z}(s) \right\|_\infty \le \gamma_o$$

if and only if the condition $\gamma_c < \gamma_o$ is verified.

In conclusion, the black box model offers guaranteed performances for the original process only if it derived from a specific class of observers, and the black box model in closed loop has a norm that outperforms the error of estimating the objectives.
We offer in the following a trace of demonstration of the previous result.
Consider the output estimator (7.26) with an estimation error given by (7.28), seen in the previous section. Assume to select the best estimator in the worst disturbance conditions as result from testing a guaranteed upper bound for the H_∞ norm. A simple analysis, conducted exploiting duality, from the results of figure 7.5 and from equation (7.21), shows that the worst conditions are reached when disturbances satisfy the condition

$$\left(B_1 - KD_{21} \right) \cdot w^* = L\hat{e}_z = LC_1\hat{e} \,. \tag{7.31}$$

In fact, any perturbation with respect to this value, will give an estimation error

$$\begin{bmatrix} \dot{\hat{e}} \\ \hat{e}_z \end{bmatrix} = \left[\begin{array}{c|c} A - KC_2 + LC_1 & B_1 - KD_{21} \\ \hline C_1 & 0 \end{array}\right] \cdot \begin{bmatrix} \hat{e} \\ \tilde{w} \end{bmatrix} \tag{7.32}$$

which is exactly the dual of 7.5.
Hence, the (7.32) represents the estimation error for disturbances in the neighbor of their worst conditions. In this neighbor, the black box model can be written as

$$\begin{bmatrix} \dot{\hat{x}} \\ \hat{z} \\ \hat{y} \end{bmatrix} = \left[\begin{array}{c|ccc} A & K & B_2 & -L \\ \hline C_1 & 0 & D_{12} & 0 \\ C_2 & 0 & 0 & 0 \end{array}\right] \cdot \begin{bmatrix} \hat{x} \\ \hat{e}_y \\ u \\ \hat{e}_z \end{bmatrix} \tag{7.33}$$

Let consider that in (7.33), while $\hat{e}_y = y - \hat{y}$ is built through the measure *y*, effectively available, $\hat{e}_z = z - \hat{z}$, depends on *z* that is, not available, and hence we assign $z = 0$. The observer in this situation modifies to the following form

$$\begin{bmatrix} \dot{\hat{x}} \\ \hat{z} \\ \hat{y} \end{bmatrix} = \left[\begin{array}{c|ccc} A & K & B_2 & L \\ \hline C_1 & 0 & D_{12} & 0 \\ C_2 & 0 & 0 & 0 \end{array}\right] \cdot \begin{bmatrix} \hat{x} \\ \hat{e}_y \\ u \\ \hat{z} \end{bmatrix} \tag{7.34}$$

substituting in the right hand side of the equation (7.34) to $\hat{z}$ its value: $\hat{z} = C_1\hat{x} + D_{12}u$, the model becomes

$$\begin{bmatrix} \dot{\hat{x}} \\ \hat{z} \\ \hat{y} \end{bmatrix} = \left[\begin{array}{c|cc} \overline{A} & K & \overline{B}_2 \\ \hline C_1 & 0 & D_{12} \\ C_2 & 0 & 0 \end{array}\right] \cdot \begin{bmatrix} \hat{x} \\ \hat{e}_y \\ u \end{bmatrix} \tag{7.35}$$

with $\overline{A} = A + LC_1$, $\overline{B}_2 = B_2 + LD_{12}$, or also, expressing explicitly the output

$$\begin{bmatrix} \dot{\hat{x}} \\ \hat{z} \\ y \end{bmatrix} = G_2 \cdot \begin{bmatrix} \hat{x} \\ \hat{e}_y \\ u \end{bmatrix} = \left[\begin{array}{c|cc} \overline{A} & K & \overline{B}_2 \\ \hline C_1 & 0 & D_{12} \\ C_2 & I & 0 \end{array}\right] \cdot \begin{bmatrix} \hat{x} \\ \hat{e}_y \\ u \end{bmatrix} \tag{7.36}$$

This is the black box model with guaranteed performances with respect to the process to assume for the control design.
The error model obtained by difference between the extended system and the observer (7.34) is

$$\begin{bmatrix} \dot{\hat{e}} \\ z \\ \hat{e}_y \end{bmatrix} = G_1 \cdot \begin{bmatrix} w \\ \hat{z} \end{bmatrix} = \left[\begin{array}{c|cc} A - KC_2 & B_1 - KD_{21} & -L \\ \hline C_1 & 0 & I \\ C_2 & D_{21} & 0 \end{array}\right] \cdot \begin{bmatrix} \hat{e} \\ w \\ \hat{z} \end{bmatrix} \tag{7.37}$$

We can approach, now, the second step of the design, closing the state feedback on the model (7.36).
Let $u = -H\hat{x}$ be the control law, the closed loop of (7.36) results in

$$\begin{bmatrix} \dot{\hat{x}} \\ \hat{z} \end{bmatrix} = \left[\begin{array}{c|c} \bar{A} - \bar{B}_2 H & K \\ \hline C_1 - D_{12} H & 0 \end{array}\right] \cdot \begin{bmatrix} \hat{x} \\ \hat{e}_y \end{bmatrix} \tag{7.38}$$

and the filter to close the output feedback is

$$\begin{bmatrix} \dot{\hat{x}} \\ y_r \end{bmatrix} = \left[\begin{array}{c|c} A + LC_1 - KC_2 - \bar{B}_2 H & K \\ \hline H & 0 \end{array}\right] \cdot \begin{bmatrix} \hat{x} \\ y \end{bmatrix} \tag{7.39}$$

The block diagram representing the complete result is show in the next figure

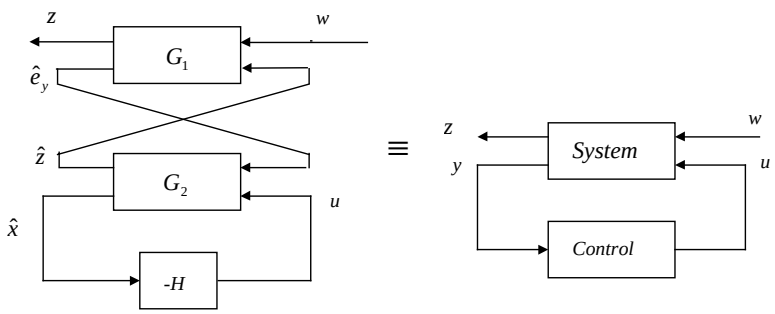

Fig. 7.14 Decomposition observer-feedback

From previous considerations we can state the two steps characterizing the design process:

1. In the first step, for a given γ_o, the feedback K of an optimum observer in the worst disturbance condition is determined. If a solution exists, γ_o represents an guaranteed upper bound of the norm of the operator disturbances-objective estimation errors. For this observer the matrix L corresponds to the worst disturbances. With K and L the black box model for feedback design is built;
2. H, the feedback from the estimated states, is computed in the second step solving a state feedback problem, assuming as new disturbances the measure reconstruction errors, and as new objectives the objective estimates. The feedback design results in a closed loop operator $\hat{e}_y \to \hat{z}$, with a norm bounded by γ_c.
3. if $\gamma_c < \gamma_o$, the control law with guaranteed bound γ_o has been found, otherwise a greater value to γ_o has to be assigned and the observer - feedback design re-

peated. A solution always exists when $\gamma_o \to \infty$ if observability with respect to C_2 and controllability with respect to B_2 of the model dynamics are satisfied: it means the optimum H_2 norm control.

7.4.3 Guaranteed bound of the H_∞ norm in the sequence control-observer

Even if previous development process of the control is our preferred one, it is very instructive to approach the output control problem in dual form.
The design process modifies in the following way:

1. The state feedback, assuming all states measurable without noise, represents the reference point of the design. In fact the bound of the norm $\|G_{w\to z}(s)\|_\infty \le \gamma_c'$ assumed for the objective operator is certainly the best achievable results that we can expect from an output feedback with uncompleted and noisy information – "*performances with output feedback cannot be better than those guaranteed with state feedback*".
2. The return signal for closing the loop has to be estimated as the output of the best state feedback in the presence of their worst disturbances.

These two assumptions integrate each other in the principal result of this section, that we present in the form of a theorem (dual of the previous one).

Theorem 7.3 *Output control with guaranteed H_∞ norm performances (dual)*

If the best state feedback in the presence of the worst disturbances for a guaranteed bound $\|G_{w\to z}(s)\|_\infty \le \gamma_c'$ exists, and an estimator of the return signal from this feedback guarantees estimation error norm $\|G_{\tilde{w}\to\hat{e}_{y_r}}(s)\|_\infty \le \gamma_o'$, then, the output feedback obtained integrating the two results guarantees internal stability to the loop and final performances

$$\|G_{w\to z}(s)\|_\infty \le \gamma_c'$$

if and only if the condition $\gamma_o' < \gamma_c'$ is satisfied.

We give a trace of demonstration of the previous result.
In the state feedback case objectives are given by (7.6), with H the optimum feedback guaranteeing an upper bound of the closed loop operator norm in the presence of disturbance in the worst conditions $w^* = Lx$. Actually, the control u is obtained by a state estimate $u = -\hat{y}_r$, $\hat{y}_r = H\hat{x}$, $u = -Hx + \hat{e}_{y_r}$ with $\hat{e}_{y_r} = H\hat{e}$, and $\hat{e} = x - \hat{x}$,, and disturbances, not necessarily in the worst conditions, can be expressed as $w = Lx + \tilde{w}$, with $\tilde{w}$ an arbitrary perturbation. In these conditions objectives and $\tilde{w}$ are given by a state feedback of the extended system

$$\begin{bmatrix} z \\ \tilde{w} \end{bmatrix} = \overline{G}_1 \cdot \begin{bmatrix} w \\ \hat{e}_{y_r} \end{bmatrix} = \left[\begin{array}{c|cc} A - B_2 H & B_1 & B_2 \\ \hline C_1 - D_{12} H & 0 & D_{12} \\ -L & I & 0 \end{array}\right] \cdot \begin{bmatrix} w \\ \hat{e}_{y_r} \end{bmatrix} \tag{7.40}$$

while $\hat{e}_{y_r}$ and y result from the following model

$$\begin{bmatrix} \hat{e}_{y_r} \\ y \end{bmatrix} = \overline{G}_2 \cdot \begin{bmatrix} \tilde{w} \\ u \end{bmatrix} = \left[\begin{array}{c|cc} \overline{A} & B_1 & B_2 \\ \hline H & 0 & I \\ \overline{C}_2 & D_{21} & 0 \end{array}\right] \cdot \begin{bmatrix} \tilde{w} \\ u \end{bmatrix} \tag{7.41}$$

with $\overline{A} = A + B_1 L, \quad \overline{C}_2 = C_2 + D_{21} L$.

The block diagram representing the feedback system with control obtained from an estimate of the loop return signal is represented by the following figure 7.15

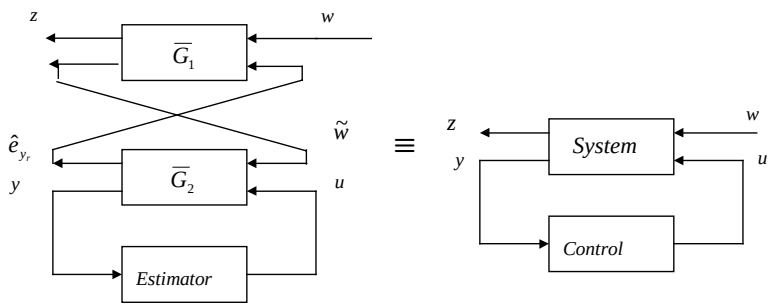

Fig. 7.15 Decomposition control-estimator

Let note, observing figure 7.15, that when w is in the worst conditions the signal $\tilde{w}$ is identically zero, as well as $\hat{e}_{y_r}$ (selecting the initial conditions of the observer zero), hence the norm of the objectives is the closest to the bound $\|z\|_2 \le \gamma_c' \|w\|_2$.

The loop return signal y_r, however, is not available; we implement now its estimator. In the worst disturbance conditions it is reasonable to introduce in the model an estimate of the disturbance in the worst conditions $\hat{w}$, using $\hat{w} = L\hat{x}$, L determined in the first step. The model can be rewritten as:

$$\begin{bmatrix} \dot{\hat{x}} \\ \hat{y}_r \\ \hat{y} \end{bmatrix} = \left[\begin{array}{c|ccc} A & B_1 & B_2 & K \\ \hline H & 0 & 0 & 0 \\ C_2 & D_{21} & 0 & 0 \end{array}\right] \cdot \begin{bmatrix} \hat{x} \\ \hat{w} \\ u \\ \hat{e}_y \end{bmatrix} \tag{7.42}$$

or also

$$\begin{bmatrix} \dot{\hat{x}} \\ \hat{y}_r \\ \hat{y} \end{bmatrix} = \left[\begin{array}{c|cc} \overline{A} & B_2 & K \\ \hline H & 0 & 0 \\ \overline{C}_2 & 0 & 0 \end{array}\right] \cdot \begin{bmatrix} \hat{x} \\ u \\ \hat{e}_y \end{bmatrix} \tag{7.43}$$

The estimation error, obtained from the difference between (7.41) and (7.43), observing also that $\hat{e}_y = y - \hat{y} = \overline{C}_2 \hat{e}_x + D_{21}\tilde{w}$ assumes the following form

$$\begin{bmatrix} \dot{\hat{e}}_x \\ \hat{e}_{y_r} \end{bmatrix} = \left[\begin{array}{c|c} \overline{A} - K\overline{C}_2 & B_1 - KD_{21} \\ \hline H & 0 \end{array}\right] \cdot \begin{bmatrix} \hat{e}_x \\ \tilde{w} \end{bmatrix} \tag{7.44}$$

This result is nothing but the solution of the output estimation problem (7.11) seen in section 7.3.2 applied to (7.41).
The original problem of control is reduced to a problem of estimation of the return signal with the objective to minimize the estimation error $\hat{e}_{y_r}$.

There exists a similarity with (4.71) In chapter 4, the model here has, however, a few significant differences due to the presence of the disturbance in the worst conditions.
Let the observer guarantee a H_∞ norm of the error operator (7.44) $\left\| G_{\tilde{w} \to \hat{e}_{y_r}}(s) \right\|_\infty \le \gamma_o'$.

The resulting controller, obtained with proper substitutions in (7.42), is

$$\begin{bmatrix} \dot{\hat{x}} \\ \hat{y}_r \end{bmatrix} = \left[\begin{array}{c|c} \overline{A} - K\overline{C}_2 - B_2 H & K \\ \hline H & 0 \end{array}\right] \cdot \begin{bmatrix} \hat{x} \\ y \end{bmatrix} \tag{7.45}$$

From previous results the steps for designing the control are the following:

1. In the first step the best state feedback H for a guaranteed norm bound γ_c' is computed (7.4). In this condition the worst disturbance is related to the matrix L;
2. K, the estimator feedback, is computed, in turn, estimating the loop return signal (7.41). Let be the resulting operator norm of the estimation error $\tilde{w} \to \hat{e}_{y_r}$ bounded by γ_o'.
3. If $\gamma_o' < \gamma_c'$ the objective to design a controller guaranteeing $\left\| G_{w \to z}(s) \right\|_\infty \le \gamma_c'$ has been achieved, otherwise a greater value of γ_c' must be proposed and the design process repeated.

This result is the dual of the one obtained solving the problem (7.35).
We note that the resulting filters, as well as the feedback matrices L, H and K are not identical in the two cases, performances however are identical. The solution if the problem, in fact, is not unique, but this fact was already known.

7.4.4 Conclusions

We have solved the problem to design a control with a guaranteed closed loop norm following two dual approaches. These are equivalent, being obtained by adopting the extended system or its transpose.
We have seen that the problem to guarantee a bound of the H_∞ norm, similarly to the H_2 norm case, is approached by solving two problems in sequence: state estimation and state feedback. Solved the first problem, we obtain an abstract representation of process, uncertainties and objectives, we called black box model, that under certain conditions is equivalent in term of norm to the original one.
There exists, however, a substantial difference between the two approaches H_2 and H_∞, and this difference is evidenced comparing figures 7.14 and 7.15 with 4.18 and 4.19. While in the first case a separation exists, either in the design and in the resulting closed loop dynamics, between feedback and observer, in the second case the two problems are interdependent and the dynamics of the controlled system is not any more the union of the dynamics of feedback and observer resulting from the design.

7.5 The black box model

We clarify the idea to substitute to the original extended system an abstract representation with guaranteed performance to simplify the design of the feedback. The decompositions in figures 7.14 and 7.15 offer two dual interpretations of this idea.
In first interpretation the best estimators of the objectives evaluated by the estimation error $\|\hat{e}_z\|_2$ given by (7.36) is the black box model, as shown in the next figure

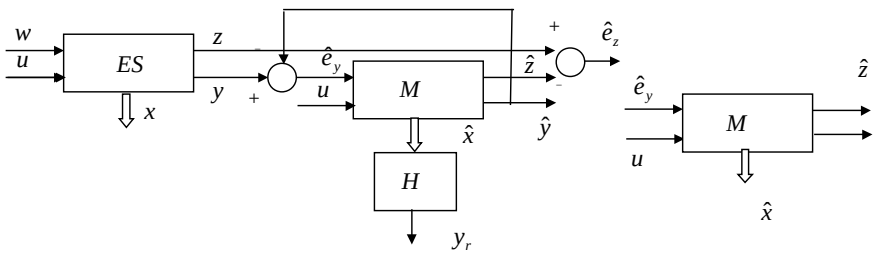

Fig. 7.16 Black box model

The control structure results from the design of the state feedback of the model

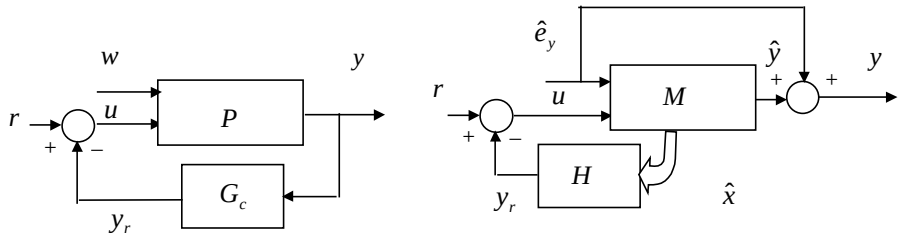

Fig. 7.17 Black box model in closed loop

In the second interpretation expression (7.41) offers a dual interpretation.

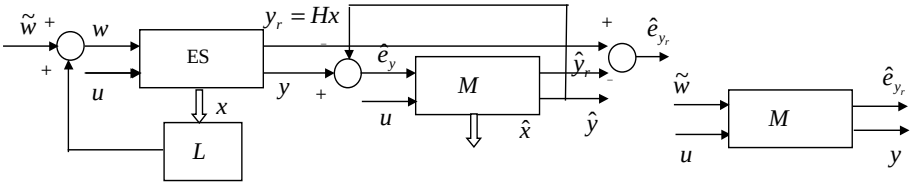

Fig. 7.18 Dual interpretation of the black box model

The state feedback return signal from the extended system is the unmeasurable output we want to estimate. In conclusion the control structure is similar to the one of figure 7.17 but the two steps, estimation and control, have been interchanged.

7.6 Disturbances directly present on the objectives $D_{11} \neq 0$

Before approaching sample data systems we briefly consider the case where matrix D_{11} is different from zero and disturbances are known.
If disturbances are directly present on the objectives ($D_{11} \neq 0$), and are measurable, such as in the direct disturbance compensation case, performances are improved by adding to state feedback a term function of disturbances.
The new control law has the following form.

$$u = -Hx - H_w w \tag{7.46}$$

The extended system is the following

$$\begin{bmatrix} \dot{x} \\ z \\ y \end{bmatrix} = \left[\begin{array}{c|cc} A & B_1 & B_2 \\ \hline C_1 & D_{11} & D_{12} \\ C_2 & D_{21} & 0 \end{array}\right] \cdot \begin{bmatrix} x \\ w \\ u \end{bmatrix} \quad \text{with condition} \quad \text{a) } D_{12}'D_{12} = I \text{ e b) } D_{21}D_{21}' = I \tag{7.47}$$

where we indicate also

$$B = [B_1 \quad B_2] \text{ e } D_1 = [D_{11} \quad D_{12}] \tag{7.48}$$

The closed loop system, is in these conditions

$$\begin{bmatrix} \dot{x} \\ z \end{bmatrix} = \left[\begin{array}{c|c} A - B_2 H & B_1 - B_2 H_w \\ \hline C_1 - D_{12} H & D_{11} - D_{12} H_w \end{array}\right] \cdot \begin{bmatrix} x \\ w \end{bmatrix} \tag{7.49}$$

It has been proven that to guarantee a bound to the H_∞ norm of this operator the output signal $(z \quad T_{11}w)$ has to be taken into account for a given matrix T_{11}, and to compute the gramian the new observability pair

$$\left(A - B_2 H, \begin{bmatrix} C_1 - D_{12} H \\ T_{11} L \end{bmatrix} \right) \tag{7.50}$$

substitutes (7.23).
The observability gramian results from

$$(A - B_2 H)' X + X(A - B_2 H) + (C_1 - D_{12} H)'(C_1 - D_{12} H) + L' T_{11}' T_{11} L = 0 \,. \tag{7.51}$$

where the matrices H, H_w, T_{11} e L are linked by the following relationships

$$\begin{aligned} H &= D_{12}' C_1 + B_2' X \\ H_w &= D_{12}' D_{11} \\ T_{11}' T_{11} &= \gamma^2 I - D_{11}'(I - D_{12}' D_{12}) D_{11}' \\ L &= T_{11}^{-1} T_{11}^{-T} [I \quad - D_{12}' D_{11}](D_1' C_1 + B' X) \end{aligned} \tag{7.52}$$

7.6.1 Conclusions

Previous result lends themselves to some interesting conclusions.
When $D_{11} \neq 0$, situation frequently found in the control specifications, no substantial modifications result in the solution, with the exception of the presence of the matrix T_{11} in the gramian computation.
The direct contributions from disturbances with gain H_w doesn't affect the feedback and, as can be seen in (7.52), has the unique scope to minimize the contribution to the norm of the term D_{11}.

7.7 Elemental design examples

In this section we replicate with synthesis techniques the same examples used to introduce the classical design in the frequency domain. It will be interesting verify that, starting from identical specifications, in the new results will be present the elements similar to those used by classical approaches such as lead, lag filters and so on.

Example 7.4 Lag filter to guarantee error zero to tracking a ramp

The problem is the one proposed in the example 6.6 and approaches the requirements of the sensitivity function at low frequency. The model is given by

$$G(s) = \frac{400}{s\,(s+24)},$$

We impose a closed loop behavior, with unitary feedback, represented by the transfer function

$$G_{eqdes}(s) = \frac{\omega_n^2}{s^2 + 2\zeta\omega_n s + \omega_n^2}, \quad \zeta = 0.6 \quad \omega_n = 20, \tag{7.53}$$

with tracking error zero to the ramp.
To satisfy these two requirements, adopting an extended system of the type of figure 7.2 where $G_d \equiv W_1$, an output weighting function

$$W_1(s) = \frac{(s+0.1667)\,(s^2 + 24s + 404.1)}{s^2\,(s+24.17)}$$

is selected, with the following arguments. To guarantee (7.53) a sensitivity

$$S(s) = 1 - G_{eqdes}(s)$$

is needed. Moreover, to satisfy steady state specifications, a second zero in the origin is required. $W_1(s)$ is the reciprocal of this sensitivity.
Completing the specifications with some measurement noise and a weight on the control activity to avoid singularity, the final extended system is the following

$$\begin{bmatrix} z \\ y \end{bmatrix} = \left[\begin{array}{cccc|cc} -24.2 & & & & 8 & \\ 8 & & & & & \\ & 1 & & & & \\ & & & 1 & & \\ & & & -24 & & 400 \\ \hline -4.13e-4 & 6.38 & 1.05 & 1 & 1 & \\ & & & & & 0.1 \\ -4.13e-4 & 6.38 & 1.05 & 1 & 1 & 1e-3 \end{array}\right] \cdot \begin{bmatrix} w \\ u \end{bmatrix} \tag{7.54}$$

Applying the design process, the reachable performance is $\gamma = 1$, and the resulting compensator

$$G_c(s) = \frac{184.7332(\mathrm{s}+0.1779)(\mathrm{s}+24)(\mathrm{s}+105)}{\mathrm{s}(\mathrm{s}+24.17)(\mathrm{s}^2+204.7\mathrm{s}+1.94\mathrm{e}004)} .$$

Let note that, ignoring zeros and poles at high frequencies, that have scarce roles in the compensation the filter is very similar to the one design in the previous chapter

$$G_c(s) = \frac{s+0.165}{\mathrm{s}} .$$

Example 7.5 Lead filter to guarantee loop stability margins

This problem has been considered in the example 6.8, it takes into account a requirement on the stability margin. The open loop system is given by

$$G(s) = \frac{400}{\mathrm{s}^2(\mathrm{s}+24)} ,$$

and the weight on performance

$$W_1^{-1} = \frac{2\mathrm{s}^2}{\mathrm{s}^2+5\mathrm{s}+6.25} .$$

This function answers to two objectives: to define the band of the sensitivity function, and its behavior at steady state, and to impose a margin of stability by constraining the maximum absolute value below 2.
The extended system is

$$\begin{bmatrix} z \\ y \end{bmatrix} = \left[\begin{array}{cccc|cc} & 1 & & & & \\ & & & & 1 & \\ & & 1 & & & \\ & & & 1 & & \\ & & & -24 & & 400 \\ \hline 3.13 & 2.5 & 1 & & 0.5 & \\ & & & & & 0.1 \\ 3.13 & 2.5 & 1 & & 0.5 & 1e-3 \end{array}\right] \cdot \begin{bmatrix} w \\ u \end{bmatrix} \tag{7.55}$$

The reachable bound of the closed loop operator norm value is $\gamma = 1$.
The compensator resulting from the synthesis is

$$G_c(s) = \frac{98.1958(\mathrm{s}+1.091)(\mathrm{s}+24)}{(\mathrm{s}+29.55)(\mathrm{s}^2+22.39\mathrm{s}+377)} .$$

Ignoring, again, higher frequency dynamics, that have no influence in the compensation, the filter has a lead behavior equivalent to the one built by trials and errors

$$G_c(s) = \frac{8(s+3)}{s+24}.$$

In the next figure the sensitivity functions (S_1 from synthesis, S_2 from classical design) are compared with W_1^{-1}

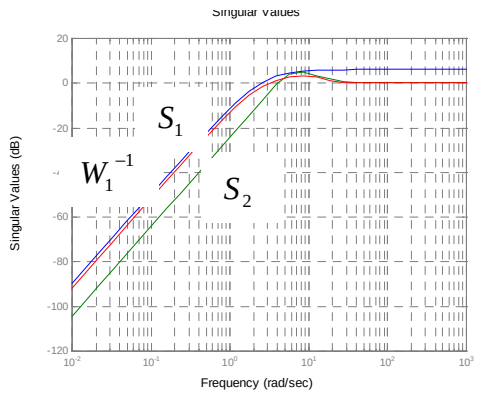

Fig. 7.19 Comparisons between performances of two compensators

Example 7.6 Notch filter to guarantee robust stability

We add to the requirements of the previous example uncertainty represented by ignoring parasitic dynamics described by multiplicative uncertainty with weight W_2

$$G_p = \frac{400 \cdot 225}{s^2(s+24)(s^2+2s+225)} = \frac{400}{s^2(s+24)}(1+W_2\Delta), \quad W_2 = \frac{s(s+2)}{s^2+2s+225}.$$

The new extended model is described in figure 7.20, similar in principle to the prototype 7.3, with weights transferred from disturbances to objectives. The reasons for that will be cleared later.

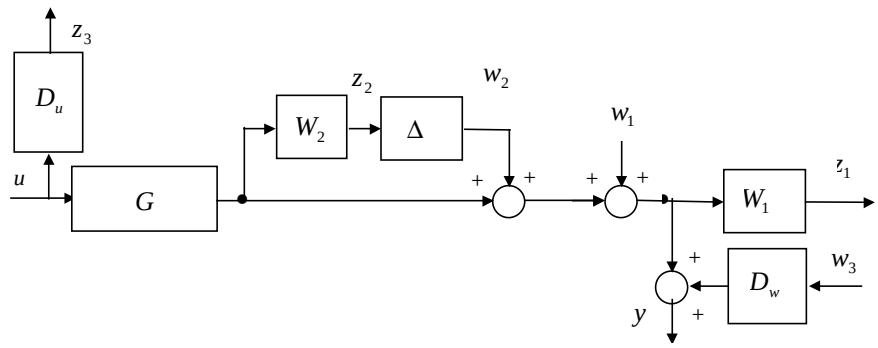

Fig. 7.20 Performance, and robust stability

The extended system is the following

$$\begin{bmatrix} z \\ y \end{bmatrix} = \left[\begin{array}{cccccc|ccc} & 1 & & & & & & & \\ & & & 1 & & & 1 & 1 & \\ & & 1 & & & & & & \\ & -225 & -2 & 1 & & & & & \\ & & & & 1 & & & & \\ & & & & & 1 & & & \\ & & & & & -24 & & & 400 \\ \hline 3.13 & 2.5 & & 0.5 & & & 0.5 & 0.5 & \\ & & -225 & 1 & & & & & \\ & & & & & & & & 0.01 \\ & & & 1 & & & 1 & 1 & 0.001 \end{array}\right] \cdot \begin{bmatrix} w \\ u \end{bmatrix} \tag{7.56}$$

With the proposed system the design reaches a guaranteed bound $\gamma = 1$, if a structuring approach as (5.33) is adopted, hence robust performances are guaranteed.
The compensation filter is

$$G_c(s) = \frac{2598.7255(s+24)(s+1.137)(s^2+2s+225)}{(s+71.59)(s^2+10.39s+321.8)(s^2+58.6s+2597)}.$$

With the cautions of eliminating some high frequency dynamics, the synthesized compensator has similar behavior of the classical one. In particular are recognizable lead action and notch filter. The frequency plots of the two filters are compared in the next figure.

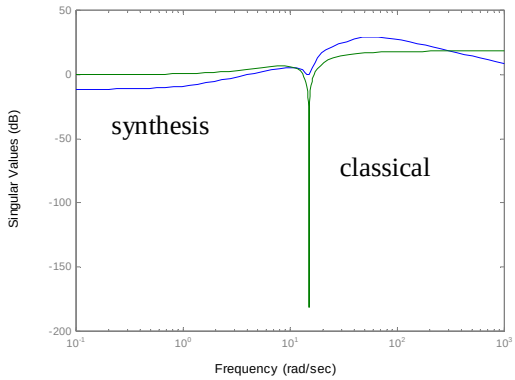

Fig. 7.21 Comparison of two filters

It is useful to compare the indices of robust performances $|W_1 S| + |W_2 \cdot G_{eq1}|$ in the two cases.

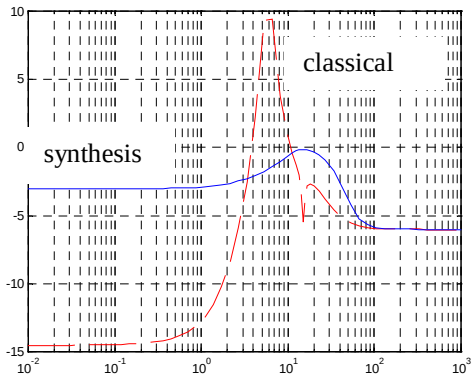

Fig. 7.22 Comparison of robust performance indices

You may note from a closer analysis that the classical design doesn't satisfy robust performances, but simply robust stability, at difference from the synthesis design.

Example 7.7 Two degree of freedom design

The system is the same of example 7.5. We add a requirement on the tracking error, assigning the desired closed loop transfer function G_{eqdes} :

$$G_{eqdes} = \frac{0.25}{s^2 + 0.6\,s + 0.25}\,.$$

Justifications for this choice are contained in the example 7.5.
The block diagram of the extended system is contained in figure 7.4 and the equations are

$$\begin{bmatrix} z \\ y \end{bmatrix} = \left[\begin{array}{cccccc|cccc} & 1 & & & & & & & & \\ & & & & & & 1 & & & \\ & & & 1 & & & & & & \\ & & -0.25 & -0.6 & & & & 0.125 & & \\ & & & & 1 & & & & & \\ & & & & & 1 & & & & \\ & & & & & -24 & & & & 400 \\ \hline 3.13 & 2.5 & & 1 & & & 0.5 & & & \\ -6.25 & -5 & 2 & & -2 & & -1 & & & \\ & & & & & & & & & 0.1 \\ 3.13 & 2.5 & & 1 & & & 0.5 & & 0.001 & \\ & & & & & & & 0.5 & & 0.0001 \end{array}\right] \cdot \begin{bmatrix} w \\ u \end{bmatrix} \tag{7.57}$$

Completed the design are compared desired and achieved closed loop functions

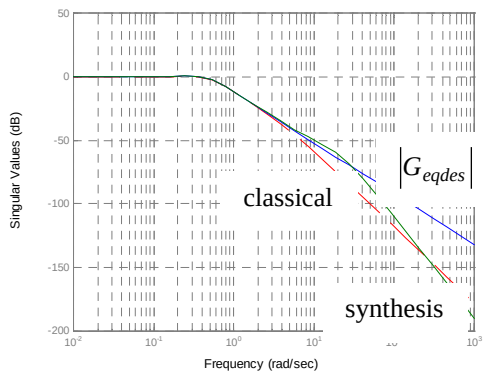

Fig. 7.23 G_{eqdes} and comparisons of the results

The control filters in the two cases

$$G_c(s) = \frac{210.49\,(s+1.13)\,(s+24)\,(s^2+0.6s+0.25)}{(s+34.17)\,(s^2+0.6s+0.25)\,(s^2+27.4s+644.9)}$$
$$G_d(s) = \frac{0.62931\,(s+12.09)\,(s+24)\,(s+2.502)\,(s+2.498)}{(s+34.17)\,(s^2+0.6s+0.25)\,(s^2+27.4s+644.9)} \tag{7.58}$$

Example 7.8 Two degree of freedom in the presence of uncertainty

We complete previous example introducing the uncertainty of example 7.6. The block diagram of the extended system is obtained merging the two schemes of figure 7.20 and 7.4, where the objective z_1 through the weighting function W_1 through the operator $w_{11} \to z_1$, takes into account for the sensitivity specifications and, through the operator $r \to z_1$, of the tacking error.

The filters resulting from the design are

$$G_c(s) = \frac{3270.3291\,(s+24)\,(s+1.14)\,(s^2+0.6s+0.25)\,(s^2+2s+225)}{(s+69.94)\,(s^2+0.6s+0.25)\,(s^2+11.25s+322.2)\,(s^2+58.88s+3320)} \quad (7.59)$$

$$G_d(s) = \frac{12.1087\,(s+12.12)\,(s+24)\,(s+2.665)\,(s+2.382)\,(s^2+2s+225)}{(s+69.94)\,(s^2+0.6s+0.25)\,(s^2+11.25s+322.2)\,(s^2+58.88s+3320)}$$

Let compare compensators in the two cases (7.58) and (7.59)

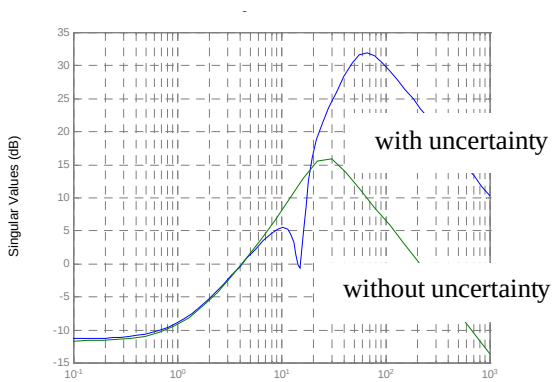

Fig. 7.24 Compensator with and without uncertainty

In the presence of uncertainty a greater lead action is required from the filter to improve stability margins.

Example 7.9 Aircraft attitude control

The design of an attitude control started a the beginning of this chapter is concluded in this example. The extended system encompasses disturbances on the dynamics and tracking error. The measure is the attitude angle.

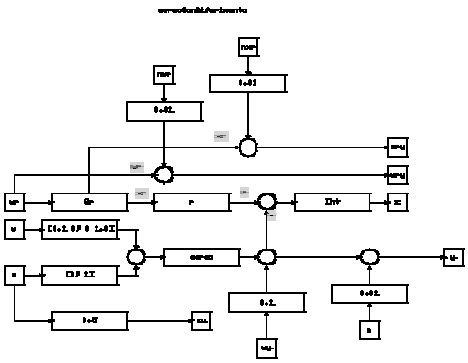

Fig. 7.25 Extended system of the aircraft longitudinal attitude control

With this model the best achievable value of the H_∞ norm of the closed loop operator is 2.5. The step response has not significant differences with respect to the state feedback case

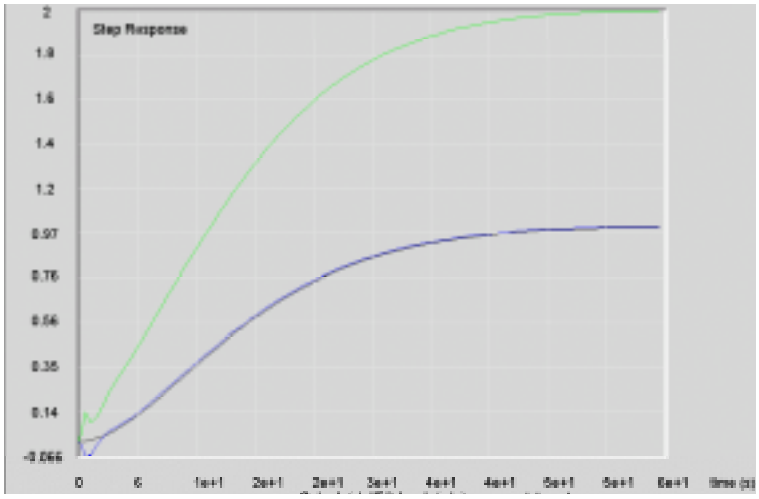

Fig. 7.26 Step response of output and control

The effect of disturbances is, however, relevant

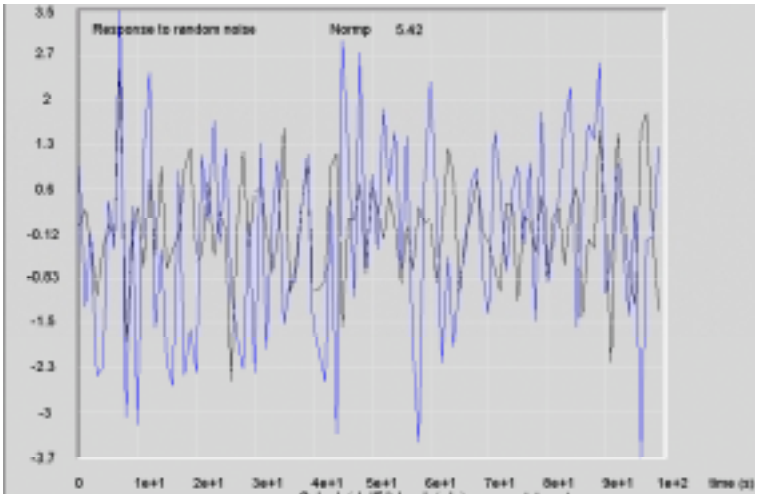

Fig. 7.27 Response to disturbances

With power spectra norm of the output error and of control, respectively, 2.5 e 5.4.
It is interesting to show the behavior in frequency of the compensator and of the loop function.

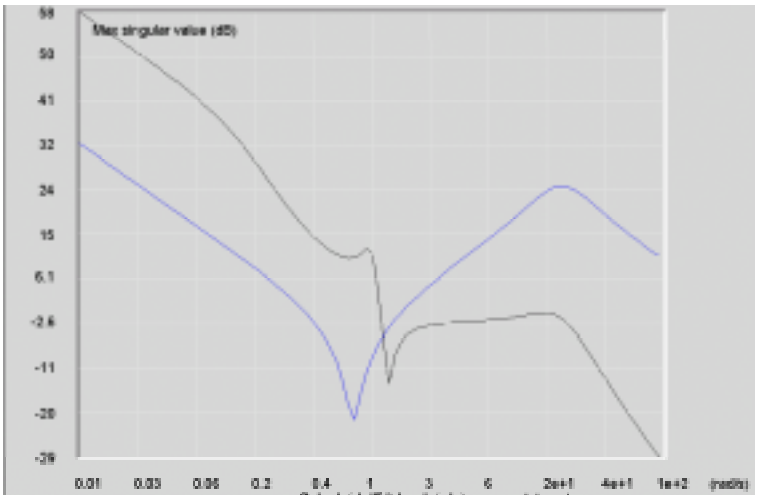

Fig. 7.28 Transfer functions of compensator and loop

7.8 Sampled data systems

Sampled data systems doesn't deserve a special attention, with the exception of a few peculiarities: in sampled data system the matrix D_{11} is customarily present and pure delays can be explicitly treated.
Even if the equations are different design techniques and development process of the continuos case apply very closely also to the discrete case [6]. See also the appendix of [7].
The extended system is defined similarly to the continuous case

$$\begin{bmatrix} x(k+1) \\ z(k) \\ y(k) \end{bmatrix} = \left[\begin{array}{c|cc} A & B_1 & B_2 \\ \hline C_1 & D_{11} & D_{12} \\ C_2 & D_{21} & 0 \end{array}\right] \cdot \begin{bmatrix} x(k) \\ w(k) \\ u(k) \end{bmatrix} \quad \text{with the conditions} \quad \text{a) } D_{12}'D_{12} = I \text{ e b) } D_{21}D_{21}' = I \tag{7.60}$$

Conditions a) and b) are obtained by properly transforming the input and output vector spaces.
The basic difference is constituted by the Lyapunov equations to compute gramians that in the discrete case assume the following form:

$$X = A'XA + C'C$$
$$Y = AXA' + BB'$$

7.8.1 Control with total information

Control

We consider preliminarily results of state feedback. The starting problem is to compute the state feedback that minimizes the observability gramian of the closed loop system. The minimum is obtained with a state feedback

$$u = -Hx \tag{7.61}$$

The closed loop operator assumes the well know form

$$z = \left[\begin{array}{c|c} A - B_2H & B_1 \\ \hline C_1 - D_{12}H & D_{11} \end{array}\right] \cdot w$$

The Lyapunov equation of the observability gramian is

$$X_0 = (A - B_2H)' X_0 (A - B_2H) + (C_1 - D_{12}H)'(C_1 - D_{12}H) = 0$$

To minimize the norm of X_0 there exists an iterative algorithm, as for the continuous case, with H given by

$$H = (I + B_2'X_0B_2)^{-1}(D_{12}'C_1 + B_2'X_0A).$$

If, instead of the gramian, we want to minimize the closed loop operator norm $\|G_{w\to z}(z)\|_2$ and disturbances are known, a feedforward contribution from disturbances has to be added to the feedback:

$$u = -Hx - H_w w \tag{7.62}$$

with

$$H_w = \left(I + B_2' X_0 B_2\right)^{-1}\left(D_{12}' D_{11} + B_2' X_0 B_1\right)$$

The controlled system is now

$$z = \left[\begin{array}{c|c} A - B_2 H & B_1 - B_2 H_w \\ \hline C_1 - D_{12} H & D_{11} - D_{12} H_w \end{array}\right] \cdot w$$

We note that the optimum gramian is not influenced by the presence of the feedforward term.

Observer

By duality is solved the observer problem. The estimation error operator is:

$$\begin{bmatrix} \dot{\hat{e}} \\ \hat{e}_z \end{bmatrix} = \left[\begin{array}{c|c} A - KC_2 & B_1 - KD_{21} \\ \hline C_1 - K_z C_2 & D_{11} - K_z D_{21} \end{array}\right] \cdot \begin{bmatrix} \hat{e} \\ w \end{bmatrix}. \tag{7.63}$$

In these conditions the observer assumes the following form:

$$\begin{bmatrix} \dot{\hat{x}} \\ \hat{z} \\ \hat{y} \end{bmatrix} = \left[\begin{array}{c|cc} A & K & B_2 \\ \hline C_1 & K_z & D_{12} \\ C_2 & 0 & 0 \end{array}\right] \cdot \begin{bmatrix} \hat{x} \\ \hat{e}_y \\ u \end{bmatrix} \tag{7.64}$$

that, expressed directly from the system outputs, becomes

$$\begin{bmatrix} \dot{\hat{x}} \\ \hat{z} \\ \hat{y} \end{bmatrix} = \left[\begin{array}{c|cc} A - KC_2 & K & B_2 \\ \hline C_1 - K_z C_2 & K_z & D_{12} \\ C_2 & 0 & 0 \end{array}\right] \cdot \begin{bmatrix} \hat{x} \\ y \\ u \end{bmatrix} \tag{7.65}$$

Guaranteed performances

We approach here the prototype of the state feedback problem guaranteeing a bound of the H_∞ norm $\|G_{w\to z}(z)\|_\infty \le \gamma$.

The problem is approached as the minimization of the observability gramian in the worst disturbance conditions, with control of the form

$$u = -Hx - H_w w \tag{7.66}$$

and worst disturbances linear functions of the states

$$w = Lx \tag{7.67}$$

The observability gramian satisfies the following Lyapunov equation

$$X = (A - B_2 H)' X (A - B_2 H) + (C_1 - D_{12} H)' (C_1 - D_{12} H) + (T_{11} L)' (T_{11} L) = 0$$

with a certain weighting matrix T_{11}. More precisely the observability pair that defines the gramian is

$$\left(A - B_2 H \quad \begin{bmatrix} C_1 - D_{12} H \\ T_{11} L \end{bmatrix} \right)$$

where the different matrices are defined as follows

$$R = \begin{bmatrix} D_{11}' \\ D_{12}' \end{bmatrix} \begin{bmatrix} D_{11} & D_{12} \end{bmatrix} - \begin{bmatrix} \gamma^2 I & \\ & 0 \end{bmatrix}$$

$$F = \begin{bmatrix} F_1 \\ F_2 \end{bmatrix} = \left(R + B' X B \right)^{-1} \left(\begin{bmatrix} D_{11}' \\ D_{12}' \end{bmatrix} C_1 + B' X A \right)$$

$$\begin{aligned} T_{22}' T_{22} &= I + B_2' X B_2 \\ T_{21} &= T_{22}'^{-1} \left(D_{12}' D_{11} + B_2' X B_1 \right) \\ T_{11}' T_{11} &= T_{21}' T_{21} + \gamma^2 I - B_1' X B_1 - D_{11}' D_{11} \end{aligned}$$

with final solution given by

$$\begin{aligned} H &= T_{22}^{-1} T_{21} F_1 + F_2 \\ H_w &= -T_{22}^{-1} T_{21} \\ L &= -F_1 \end{aligned}$$

7.8.2 Examples

Some of the control examples solved in the continuous case are translated to a sampled data control system with digital controllers.

Example 7.10 Notch filter with a digital control

This is the sampled data form of example 7.6. A sampling period of 0.1 s is adopted.

Matrices of the extended system, obtained with a zero order hold reconstructor from the continuous case are the following

$$\begin{bmatrix} z \\ y \end{bmatrix} = \left[\begin{array}{cccccc|ccc} 1 & 0.1 & & & 0.005 & & 0.005 & 0.005 & \\ & 1 & & & 0.1 & & 0.1 & 0.1 & \\ & & 0.127 & 0.0603 & 0.00388 & & & & \\ & & -13.6 & 0.00673 & 0.0603 & & & & \\ & & & & 1 & 0.1 \;\; 0.00259 & & & 0.0402 \\ & & & & & 1 \;\; 0.0379 & & & 1.04 \\ & & & & & 0.0907 & & & 15.2 \\ \hline 3.13 & 2.5 & & & 0.5 & & 0.5 & 0.5 & \\ & & -225 & & 1 & & & & \\ & & & & & & & & 0.01 \\ & & & & 1 & & 1 & 1 & 0.001 \end{array}\right] \cdot \begin{bmatrix} w \\ u \end{bmatrix} \tag{7.68}$$

With the proposed model the best achievable bound is $\gamma = 1.2$, hence, robust performances are not satisfied.
The compensator is

$$G_c(z) = \frac{-3.7266(z-2.19)(z-0.9134)(z-0.09072)(z^2-0.134z+0.8187)}{(z+0.1321)(z^2+1.338z+0.9131)(z^2-0.4177z+0.6291)}.$$

We compare the behavior in frequency of the continuous and discrete compensator, lead action and notch filter are clearly evident.

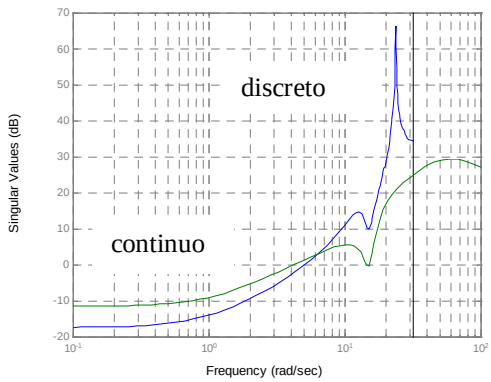

Fig. 7.29 Continuous and sampled data compensators

The loop functions are compared on the Nichols graph. Let note that, because of sampling and the relatively high sampling period, most of the stability margin of the continuous case has been lost. The reader can repeat the design with a shorter period to verify that most of the performances of the continuous case can be recovered.

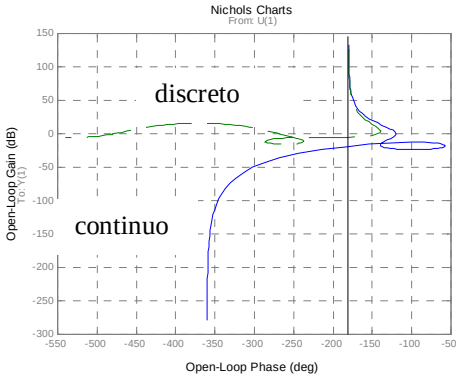

Fig. 7.30 Stability margins of the two loop functions

Indices of robust performances in the two cases are compared in the next figure

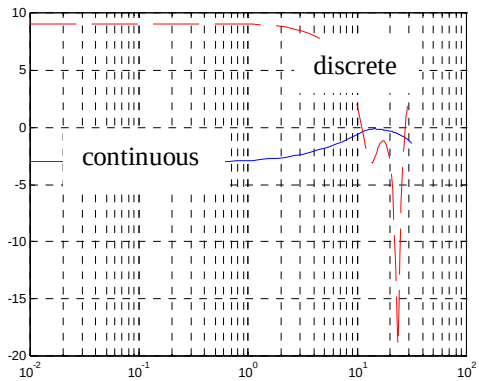

Fig. 7.31 Robust performance indices in the two cases

Example 7.11 Digital attitude control

This example repeats in digital form example 7.9. To select the sampling period we observe, first, the loop function of the continuous case

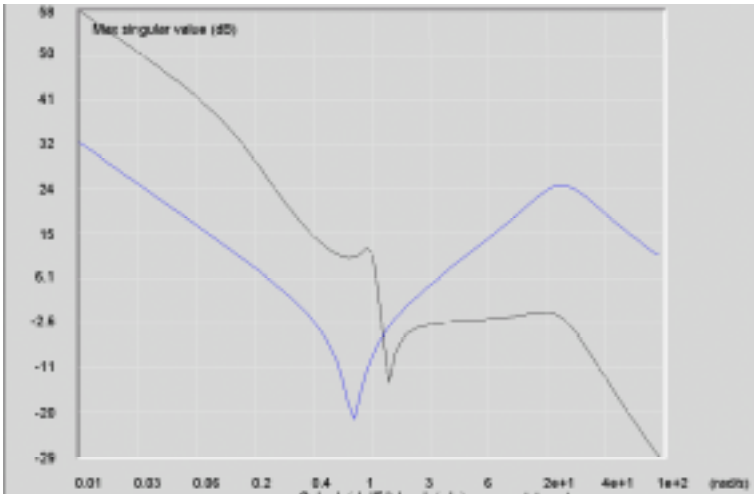

Fig. 7.32 Transfer function of compensator and loop in the continuous case

Based on the frequency analysis of the loop transfer function we select the sampling frequency as $\frac{w_\Delta}{2} = 50$ in order to obtain in the discrete case a behavior comparable with the one of the continuous case, resulting in a sampling period $\Delta = 0.05s$. The results doesn't differ substantially from those of figure 7.26.
The anomaly in the response, due to the presence of a plant zero in the right hand side will be approached with a technique of preview in the sequel. It is interesting to verify how the extended system structure allow flexibly to encompasses also this aspect.

7.9 Bibliography

[1] K. Zhou, J. C. Doyle, K. Glover. "Robust and Optimal Control", Prentice Hall, Upper Saddle River, N. J., 07458 1995.
[2] P. Colaneri, J. C. Geromel, A. Locatelli, "Control Theory and Design: an RH_2 and RH_∞ viewpoint" Academic Press, S. Diego, 1997.
[3] K. Zhou, J. C. Doyle. "Essentials of Robust Control ", Prentice-Hall International, Inc., N. J. 1998.
[4] J-C Gille, M. J. Pélegrin, P. Decaulne, "Feedback Control Systems", McGraw Hill, New York, 1959.
[6] T. Mita, X. Xin, B.D.O. Anderson. "Extended H_∞ control - H_∞ control with unstable weights", Automatica, 2000, no. 36, pp. 735-741.

[6] P. A. Iglesias, K. Glover. “State-space approach to discrete-time H_∞ control”, Int. J. Control, 1991, vol.54, no. 5, 1031-173.
[7] M. Green, D. J. N. Limebeer. “Linear Robust Control”, Prentice-Hall, Englewood Cliff, N. J. 1995.